Haier SERVICE MANUAL

LED TV

Model No. 39D3005

MSD3393LU Chassis

⚠ WARNING

This service information is designed for experienced repair technicians only and is not designed for use by the general public.
It does not contain warnings or cautions to advise non-technical individuals of potential dangers in attempting to service a product.
Products powered by electricity should be serviced or repaired only by experienced professional technicians. Any attempt to service or repair the product or products dealt with in this service information by anyone else could result in serious injury or death.

©2013 Qingdao Haier Electronics Co., Ltd.
All rights reserved. Unauthorized copying and distribution is a violation of law.

CONTENTS

Chapter 1. General Information

1-1. Document Information 3
1-2. General Guidelines.....3
1-3. Important Notice.....3
1-3-1. Follow the regulations and warnings 3
1-3-2. Be careful to the electrical shock 3
1-3-3. Electro static discharge (ESD)..... .3
1-3-4. About lead free solder (PbF).....4
1-3-5. Use the genewing parts (specified parts) 4
1-3-6 Safety check after repairment..... 4
1-3-7. Ordering Spare Parts..... 6
1-3-8. Photo used in this manual 6
1-4. How to Read this Service Manual 6
Using icons 6

Chapter 2. Specification

2-1. Specification list.....8
2-2. External pictures (four faces).....9

Chapter 3. Disassemble and Assemble

3-1. 39D3005 11
3-1-1. Remove the Stand.....11
3-1-2. Remove the Back Cabinet 11
3-1-3. Remove the Mainboard.....11
3-1-4. Remove the Power Supply Module 11
3-1-5. Remove the Speaker.....11
3-1-6. Remove the Remote Control Board 12
3-1-7. Remove the Key Board.....12

Chapter 4. Location of Controls and Components

4-1. Board Location 13
4-2. Mainboard 14
4-2-1. Function Description 14
4-2-2. Connector definition 14
4-3. Power Supply Module 15
4-3-1. Function Description 15

4-3-2. Connector definition 15
4-4. LCD Panel 16

Chapter 5. Installation Instructions

5-1. Accessories 18
5-2. External Equipment Connections.....19

Chapter 6. Operation Instructions

6-1. Front Panel Controls.....20
6-2. Back Panel Controls 21
6-3. Setting Up Your Remote Control 22

Chapter 7. Electrical Parts

7-1. Block Diagram.....23
7-2. Circuit Diagram.....30

Chapter 8. Measurements and Adjustments

8-1. Service Mode 31
8-1-1.How to enter into Service Mode..... 31
8-1-2.How to exit 31
8-2. Measurements and Adjustments 31
8-2-1. The Main Menu 31
8-2-2. General Setting 32
8-2-3. Picture 32
8-2-4. Sound..... 33
8-2-5. Debug.....33
8-3. Software Update 34
8-3-1. T.VST59 software update 34

Chapter 9. Trouble shooting

9-1. Simple check 35
9-2. Mainboard IC Introduction.....38
9-3. Mainboard Failure Check.....39
9-4. Pannel Failure.....45

Chapter 1. General Information

1-1. Document Information

Document format: Adobe PDF
Author: shouwang.wen
Compiler:

1-2. General Guidelines

When servicing, observe the original lead dress. If a short circuit is found, replace all parts which have been overheated or damaged by the short circuit.

After servicing, see to it that all the protective devices such as insulation barriers, insulation papers shields are properly installed.

After servicing, make the following leakage current checks to prevent the customer from being exposed to shock hazards.
1) Leakage Current Cold Check
2) Leakage Current Hot Check
3) Prevention of Electro Static Discharge (ESD) to Electrostatically Sensitive

1-3. Important Notice

1-3-1. Follow the regulations and warnings

Most important thing is to list up the potential hazard or risk for the service personnel to open the units and disassemble the units. For example, we need to describe properly how to avoid the possibility to get electrical shock from the live power supply or charged electrical parts (even the power is off).

This symbol indicates that high voltage is present inside.It is dangerous to make any king of contact with any inside part of this product.

This symbol indicates that there are important operating and maintenance instructions in the literture accompanying the appliance.

1-3-2. Be careful to the electrical shock

To prevent damage which might result in electric shock or fire, do not expose this TV set to rain or excessive moisture. This TV must not be exposed to dripping or splashing water, and objects filled with liquid, such as vases, must not be placed on top of or above the TV.

1-3-3. Electro static discharge (ESD)

Some semiconductor (solid state) devices can be damaged easily by static electricity. Such

components commonly are called Electrostatically Sensitive (ES) Devices. The following techniques should be used to help reduce the incidence of component damage caused by electros static discharge (ESD).

Electrostatically Sensitive (ES) Devices

Some semiconductor (solid-state) devices can be damaged easily by static electricity. Such components commonly are called Electrostatically Sensitive (ES) Devices. Examples of typical ES devices are integrated circuits and some field-effect transistors and semiconductor "chip" components. The following techniques should be used to help reduce the ncidence of component damage caused by static by static electricity.

1. Immediately before handling any semiconductor component or semiconductor-equipped assembly, drain off any electrostatic charge on your body by touching a known earth ground. Alternatively, obtain and wear a commercially available discharging wrist strap device, which should be removed to prevent potential shock reasons prior to applying power to the unit under test.

2. After removing an electrical assembly equipped with ES devices, place the assembly on a conductive surface such as aluminum foil, to prevent electrostatic charge buildup or exposure of the assembly.

1-3-4. About lead free solder (PbF)

This product is manufactured using lead-free solder as a part of a movement within the consumer products industry at large to be environmentally responsible. Lead-free solder must be used in the servicing and repairing of this product.

1-3-5. Use the genewing parts (specified parts)

Special parts which have purposes of fire retardant (resistors), high-quality sound (capacitors), low noise (resistors), etc. are used.

When replacing any of components, be sure to use only manufacture's specified parts shown in the parts list.

Safety Component

● Components identified by mark have special characteristics important for safety.

1-3-6 Safety check after repairment

Confirm that the screws, parts and wiring which were removed in order to service are put in the original positions, or whether there are the positions which are deteriorated around the serviced places serviced or not. Check the insulation between the antenna terminal or external metal and the AC cord plug blades. And be sure the safety of that.

General Servicing Precautions

1. Always unplug the receiver AC power cord from the AC power source before:
   a. Removing or reinstalling any component, circuit board module or any other receiver assembly.
   b. Disconnecting or reconnecting any receiver electrical plug or other electrical connection.
   c. Connecting a test substitute in parallel with an electrolytic capacitor in the receiver.

CAUTION: A wrong part substitution or incorrect polarity installation of electrolytic capacitors may result in an explosion hazard.

2. Test high voltage only by measuring it with an appropriate high voltage meter or other voltage measuring device (DVM, FETVOM, etc) equipped with a suitable high voltage probe.

   Do not test high voltage by "drawing an arc".

3. Do not spray chemicals on or near this receiver or any of its assemblies.

4. Unless specified otherwise in this service manual, clean electrical contacts only by applying the following mixture to the contacts with a pipe cleaner, cotton-tipped stick or comparable non-abrasive applicator; 10% (by volume) Acetone and 90% (by volume) isopropyl alcohol (90%-99% strength).

CAUTION: This is a flammable mixture.
   Unless specified otherwise in this service manual, lubrication of contacts is not required.
   Capacitors may result in an explosion hazard.

5. Do not defeat any plug/socket B+ voltage interlocks with which receivers covered by this service manual might be equipped.

6. Do not apply AC power to this instrument and/or any of its electrical assemblies unless all solid-state device heat sinks are correctly installed.

7. Always connect the test receiver ground lead to the receiver chassis ground before connecting the test receiver positive lead.

   Always remove the test receiver ground lead last. Capacitors may result in an explosion hazard.

8. Use with this receiver only the test fixtures specified in this service manual.

CAUTION: Do not connect the test fixture ground strap to any heat sink in this receiver.

9. Remove the antenna terminal on TV and turn on the TV.

10. Insulation resistance between the cord plug terminals and the eternal exposure metal should be more than Mohm by using the 500V insulation resistance meter.

11. If the insulation resistance is less than M ohm, the inspection repair should be required.
If you have not the 500V insulation resistance meter, use a Tester. External exposure metal:
Antenna terminal Headphone jack.

12. Use only a grounded-tip soldering iron to solder or unsolder ES devices.

13. Use only an anti-static type solder removal device. Some solder removal devices not classified as "anti-static" can generate electrical charges sufficient to damage ES devices.

14. Do not use freon-propelled chemicals. These can generate electrical charges sufficient to damage ES devices.

15. Do not remove a replacement ES device from its protective package until immediately before you are ready to install it.
(Most replacement ES devices are packaged with leads electrically shorted together by conductive foam, aluminum foil or comparable conductive material).

16. Immediately before removing the protective material from the leads of a replacement ES device, touch the protective material to the chassis or circuit assembly into which the device will be installed.

CAUTION: Be sure no power is applied to the chassis or circuit, and observe all other safety precautions.

17. Minimize bodily motions when handling unpackaged replacement ES devices. (Otherwise harmless motion such as the brushing together of your clothes fabric or the lifting of your foot from a carpeted floor can generate static electricity sufficient to damage an ES device.)

1-3-7. Ordering Spare Parts

Please include the following informations when you order parts. (Particularly the Version letter)

1. Model number, serial number and software version
The model number and serial number can be found on the back cover of each product. Software version can be found in the Spare Parts List.

2. Spare part No. and description
Spare part No. and description can be found in the Spare Parts List.

1-3-8. Photo used in this manual

The illustration and photos used in this Service Manual may not base on the final design of products, which may differ from your products in some way.

1-4. How to Read this Service Manual

Using icons
Icons are used to attract the attention of the reader to specific information. The meaning of each icon is described in the table below:

Note:
A “note” provides information that is not indispensable, but may nevertheless be valuable to the reader, such as tips and tricks.

Caution:

A “caution ” is used when there is danger that the reader, through incorrect manipulation, may damage equipment, loose data, get an unexpected result or has to restart(part of) a procedure.

Warning:

A “warning” is used when there is danger of personal injury.

Reference:

A “reference” guides the reader to other places in this binder or in this manual, where he/she will find additional information on a specific topic.

Chapter 2. Specification

2-1. Specification list

Model	39D3005
Screen Size	39"
Aspect Ratio	16:9
Resolution	1920x1080
Brightness (cd/m²)	280
Contrast	1500:1
Response Time (ms)	8
Angel of View	H:170°, V:160°
Color Display	16.7M
OSD Language	English,French,Spanish.
Color System	NTSC/ATSC
Audio System	MN
Audio Output Power (Built-in) (W)	8W×2
Audio Output Power (outer) (W)	No
Total Power Input (W)	100W
Voltage Range (V)	AC100V~240V
Power Frequency (Hz)	50~60Hz
Time of Sleep Timer (MINS)	240Min
Net Weight (KG)	6.85
Gross Weight (KG)	8.70
Net Dimension (MM)	883.86*548.05*248.5
Packaged Dimension (MM)	972*604*156

2-2. External pictures (four faces)

Front Side

Up Side

Right Side

Back Side

Chapter 3. Disassemble and Assemble

3-1. 39D3005

3-1-1. Remove the Stand

1. Lay down the TV set .
2. Remove the four screws from the stand which in the picture above.
3. Remove the stand.

3-1-2. Remove the Back Cabinet

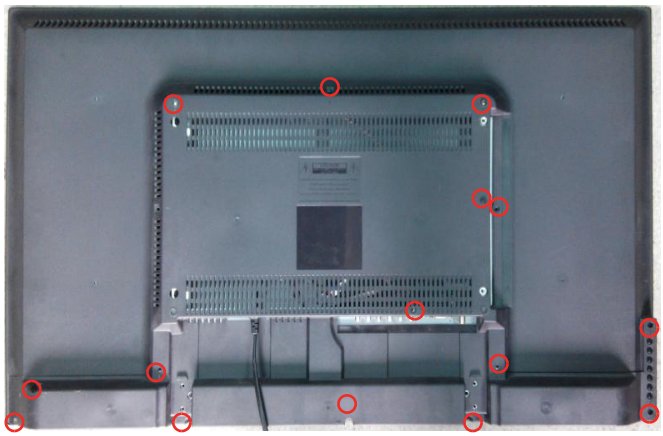

1.Remove the fifteen screws indicated with red circles.
2. Flip machine, panel side up.
3.Carefully raise the Front shell from bottom.

3-1-3. Remove the power-main board.

1. Remove the six screws indicated with red circles.
2. Then remove the side metal board and down metal board.
3. Remove the four screws indicated with red circles.
4. Remove the power-main board.

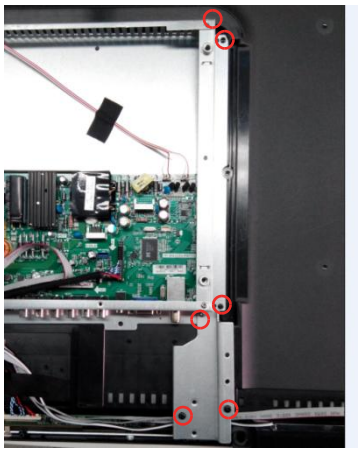

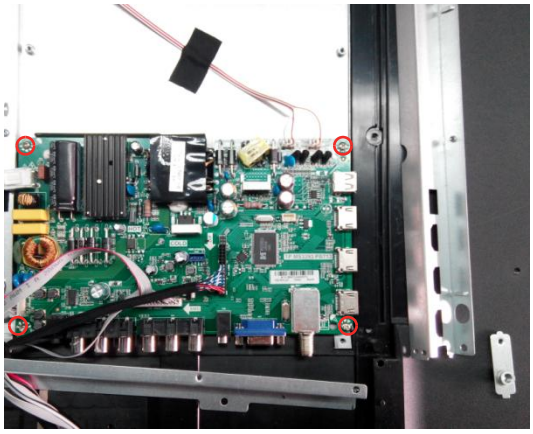

3-1-4. Remove the Speaker

Remove the speaker directly

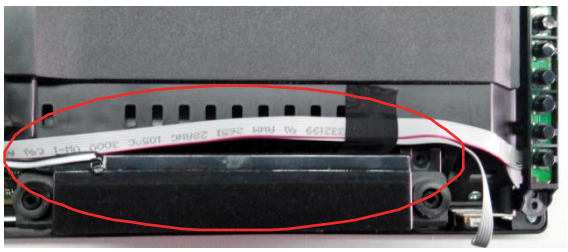

3-1-6. Remove the Remote Control Board And the Key Board

Remove the Remote Control Board and the Key Board indicated byred circle in below picture.

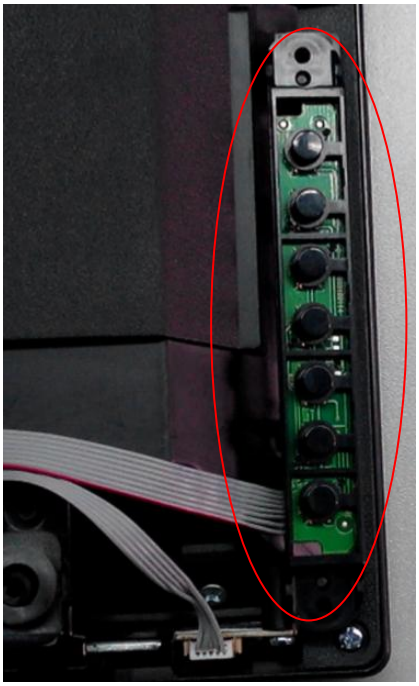

Chapter 4. Location of Controls and Components

4-1. Board Location

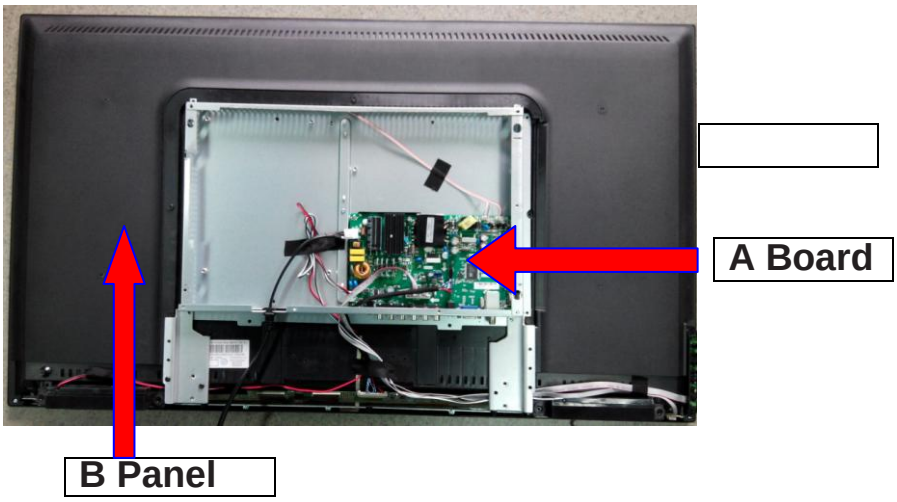

No.	Parts number	Description
A Board	6021041866	power-main board
B Panel	6047220058	LCD Panel

4-2. Mainboard

4-2-1. Function Description

Process signal which incept from exterior equipment then translate into signal that panel can display.

4-2-2. Connector definition

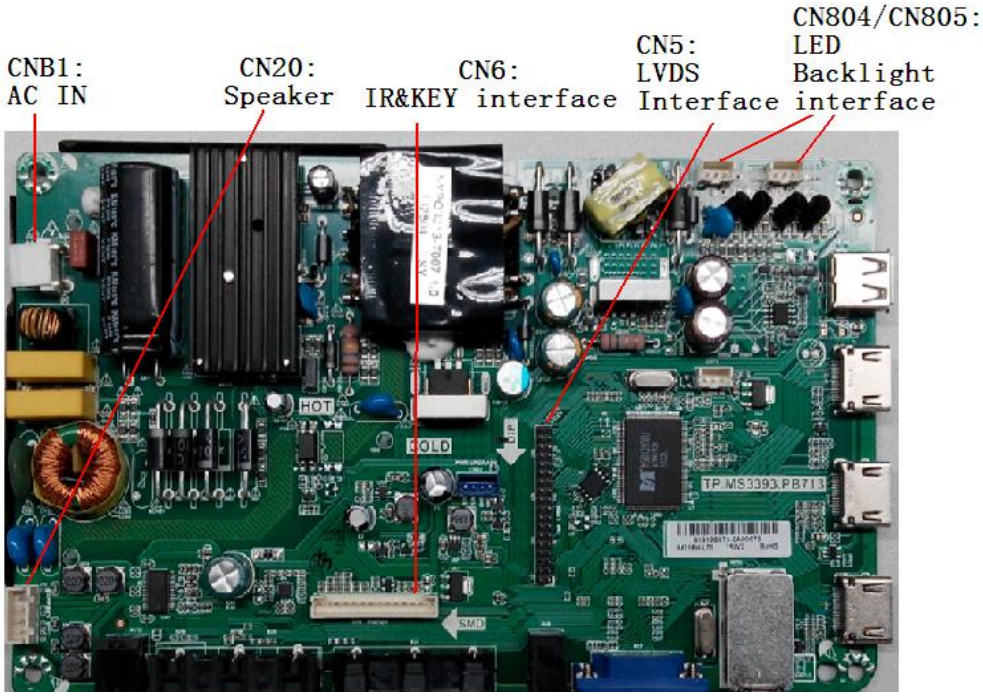

IR & Key Interface CN6	
Pin number	**Signal name**
1	GND
2	K7
3	K6
4	K5
5	K4
6	K3
7	K2
8	K1
9	K0
10	GND
11	IR
12	GRE
13	RED
14	5V

LED Backlight interface CN804/CN805	
Pin number	**Signal name**
1	LED+
2	NC
3	LED-

Speaker connector CN20	
Pin number	**Signal name**
1	ROUT+
2	ROUT-
3	LOUT-
4	LOUT+

◆ **CN5(2×15PIN/2.0): LVDS INTERFACE CONNECTOR**
（LVDS 接口）

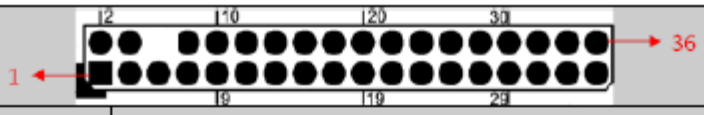

NO.	SYMBOL	DESCRIPTION
1	VCC_Panel	Power Supply for Panel
2	VCC_Panel	
3	VCC_Panel	
4	GND	Ground
5	GND	
6	NC	NC
7	RXO0-	LVDS ODD 0- Signal
8	RXO0+	LVDS ODD 0+ Signal
9	RXO1-	LVDS ODD 1- Signal
10	RXO1+	LVDS ODD 1+ Signal
11	RXO2-	LVDS ODD 2- Signal
12	RXO2+	LVDS ODD 2+ Signal
13	GND	Ground
14	GND	
15	RXOC-	LVDS ODD Clock- Signal
16	RXOC+	LVDS ODD Clock+ Signal
17	RXO3-	LVDS ODD 3- Signal
18	RXO3+	LVDS ODD 3+ Signal
19	RXE0-	LVDS EVEN 0- Signal
20	RXE0+	LVDS EVEN 0+ Signal
21	RXE1-	LVDS EVEN 1- Signal
22	RXE1+	LVDS EVEN 1+ Signal
23	RXE2-	LVDS EVEN 2- Signal
24	RXE2+	LVDS EVEN 2+ Signal
25	GND	Ground
26	GND	
27	TXEC-	LVDS EVEN Clock- Signal
28	TXEC+	LVDS EVEN Clock+ Signal
29	TXE3-	LVDS EVEN 3- Signal
30	TXE3+	LVDS EVEN 3+ Signal
31	GND	Ground
32	GND	
33	CON1	Control1
34	CON2	Control2
35	M_SCL	Main SCL
36	M-SDA	Main SDA

4-3. LCD Panel

39D3005

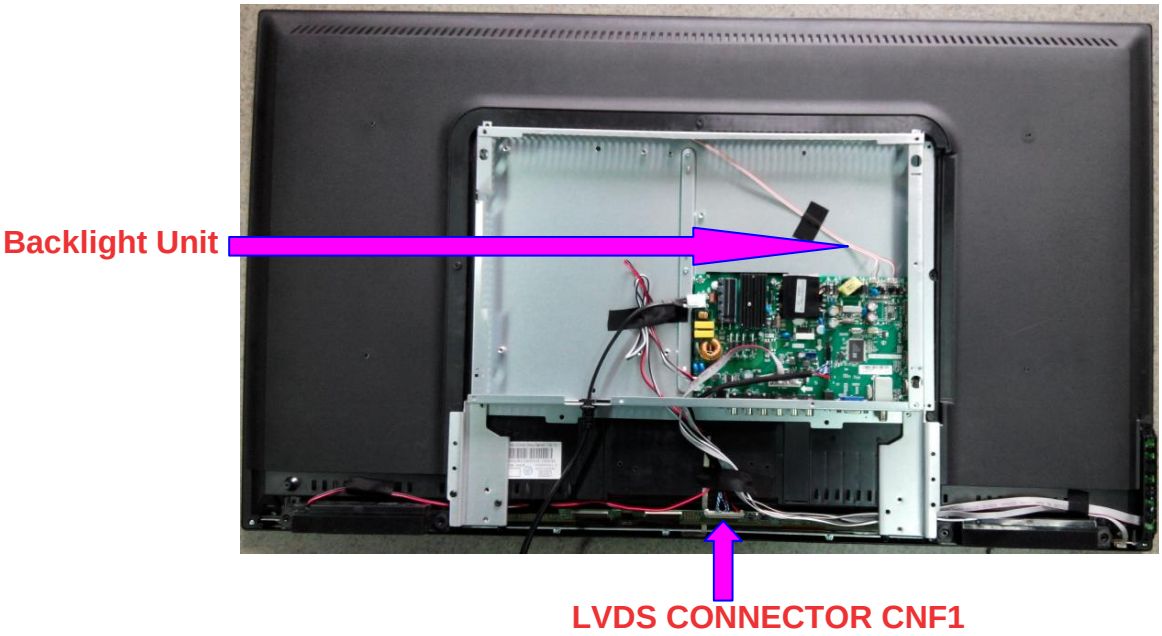

CNF1 Connector Pin Assignment: (FI-RE51S-HF(JAE) or equivalent)

Pin	Name	Description	Note
1	GND	Ground	
2	N.C.	No Connection	
3	N.C.	No Connection	
4	N.C.	No Connection	
5	N.C.	No Connection	
6	N.C.	No Connection	
7	SELLVDS	LVDS data format Selection	
8	N.C.	No Connection	
9	N.C.	No Connection	
10	N.C.	No Connection	
11	GND	Ground	
12	ERX0-	Even pixel Negative LVDS differential data input. Channel 0	
13	ERX0+	Even pixel Positive LVDS differential data input. Channel 0	
14	ERX1-	Even pixel Negative LVDS differential data input. Channel 1	
15	ERX1+	Even pixel Positive LVDS differential data input. Channel 1	
16	ERX2-	Even pixel Negative LVDS differential data input. Channel 2	
17	ERX2+	Even pixel Positive LVDS differential data input. Channel 2	
18	GND	Ground	
19	ECLK-	Even pixel Negative LVDS differential clock input.	
20	ECLK+	Even pixel Positive LVDS differential clock input.	
21	GND	Ground	
22	ERX3-	Even pixel Negative LVDS differential data input. Channel 3	
23	ERX3+	Even pixel Positive LVDS differential data input. Channel 3	
24	N.C.	No Connection	
25	N.C.	No Connection	
26	GND	Ground	
27	GND	Ground	
28	ORX0-	Odd pixel Negative LVDS differential data input. Channel 0	
29	ORX0+	Odd pixel Positive LVDS differential data input. Channel 0	
30	ORX1-	Odd pixel Negative LVDS differential data input. Channel 1	2、6
31	ORX1+	Odd pixel Positive LVDS differential data input. Channel 1	3、6
32	ORX2-	Odd pixel Negative LVDS differential data input. Channel 2	
33	ORX2+	Odd pixel Positive LVDS differential data input. Channel 2	
34	GND	Ground	
35	OCLK-	Odd pixel Negative LVDS differential clock input	
36	OCLK+	Odd pixel Positive LVDS differential clock input	
37	GND	Ground	
38	ORX3-	Odd pixel Negative LVDS differential data input. Channel 3	
39	ORX3+	Odd pixel Positive LVDS differential data input. Channel 3	
40	N.C.	No Connection	
41	N.C.	No Connection	
42	GND	Ground	
43	GND	Ground	
44	GND	Ground	
45	GND	Ground	
46	GND	Ground	
47	N.C.	No Connection	
48	N.C.	Power input (+12V)	4
49	N.C.	Power input (+12V)	5
50	N.C.	Power input (+12V)	
51	N.C.	Power input (+12V)	

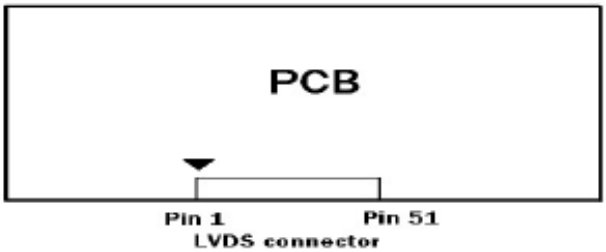

Chapter 5. Installation Instructions

5-1. Accessories

- Remote Control

Batteries

5-2. External Equipment Connections

Antenna Connection

Connect your aerial to the back of the TV into the ANTENNA IN socket.

Improve Your Signal

To improve picture quality in a poor signal area, use a signal amplifier (not supplied).

Connect Your PC to the TV

You can use your TV as a monitor for your personal computer by connecting it with a VGA cable (not supplied).

A Read your computer user guide and check it has a VGA connector.

B Turn off your TV and PC.

C Connect a D type 15-pin VGA interface cable to the VGA video interface connector on the PC. Connect the other end of the cable to the PC interface connector on the TV. Tighten the screws on the VGA connectors and connect the audio cable (not supplied) to the audio input socket on the back of the TV.

D Turn on the TV firstly and then the PC.

E Press the Source button on the TV or TV remote control to set the video input mode to PC.

F Once the image shows, if there is noise present, change the PC mode to other resolutions, change the refresh rate to other rate or adjust the brightness and contrast on the menu until the picture is clear.

Connect a DVD Player to Your TV

Connect the DVD video outputs (Y, P_b, P_r) to the COMPONENT (Y, P_b, P_r) IN socket on your TV.

A Turn on the DVD player and insert a DVD disk.

B Press the SOURCE button to select COMPONENT mode.

C Refer to the DVD player user guide for operating instructions.

Connect a DVD Player or VCR to Your TV

There are two ways in which you can connect a DVD player or VCR to your TV. Make sure that both the TV and DVD player or VCR are switched off before you connect them.

HDMI Input

A Connect the cable from the HDMI device to the TV HDMI socket.

B Press the **SOURCE** button to select HDMI mode.

C Refer to the HDMI device user guide for how to operate.

Chapter 6. Operation Instructions

6-1. Front Panel Controls

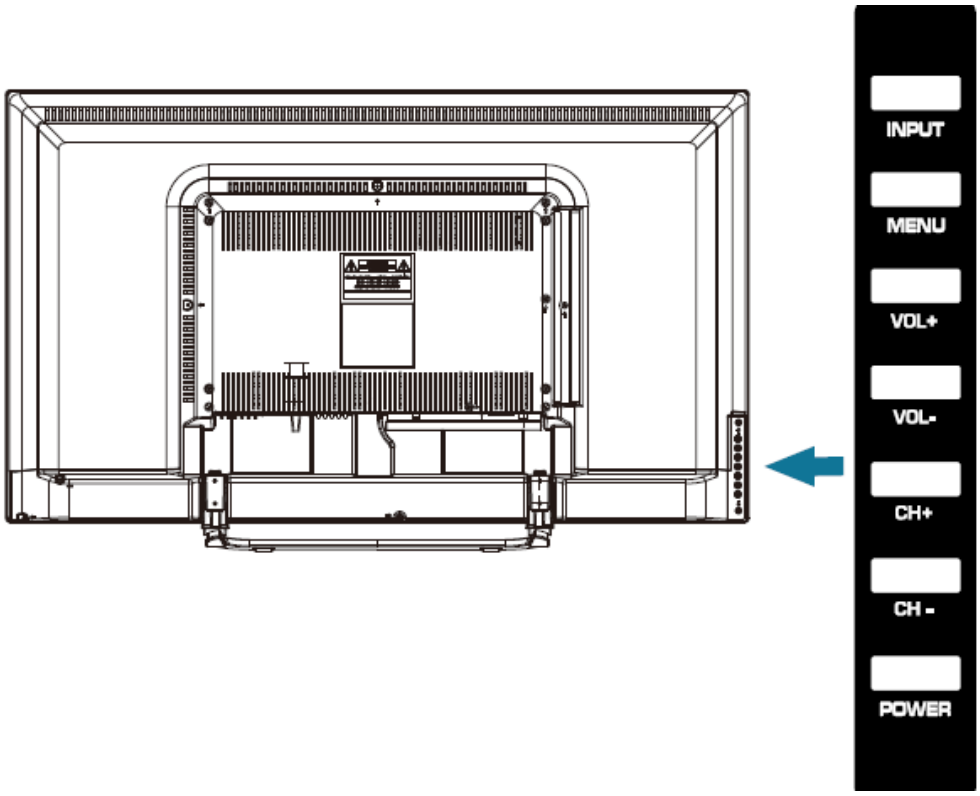

1	POWER	Press to turn the TV on and off.
2	CH-	TV channel down.
3	CH+	TV channel up.
4	VOL-	Press to decrease the volume.

5	VOL+	Press to increase the volume.
6	MENU	Press to select the main menu.
7	INPUT	Press to select the input source.

6-2. Back Panel Controls

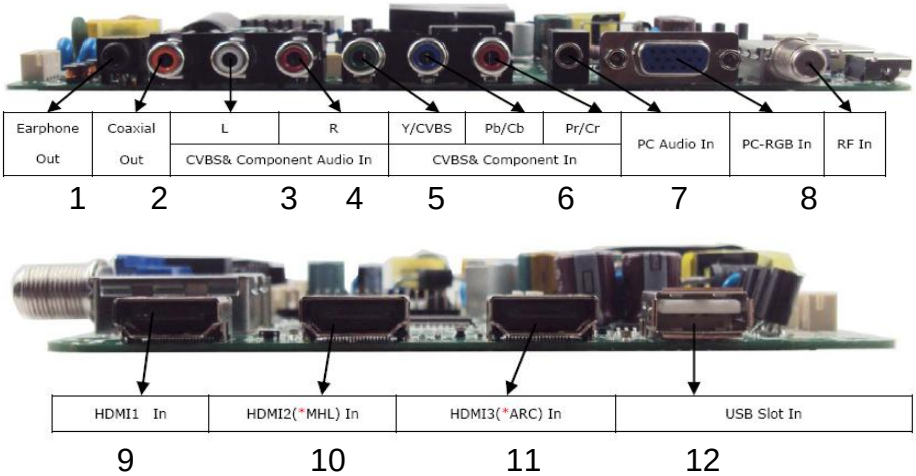

1	Earphone	output
2	Coax	output
3	Audio in	input
4	Video/Y in	input
5	PbPr IN	input
6	PC Audio	input
7	VGA	input
8	RF	input
9	HDMI1	input
10	HDMI2(MHL)	input
11	HDMI3(ARC)	input
12	USB IN	input

6-3. Setting Up Your Remote Control

When using the remote control, aim it towards the remote sensor on the TV.

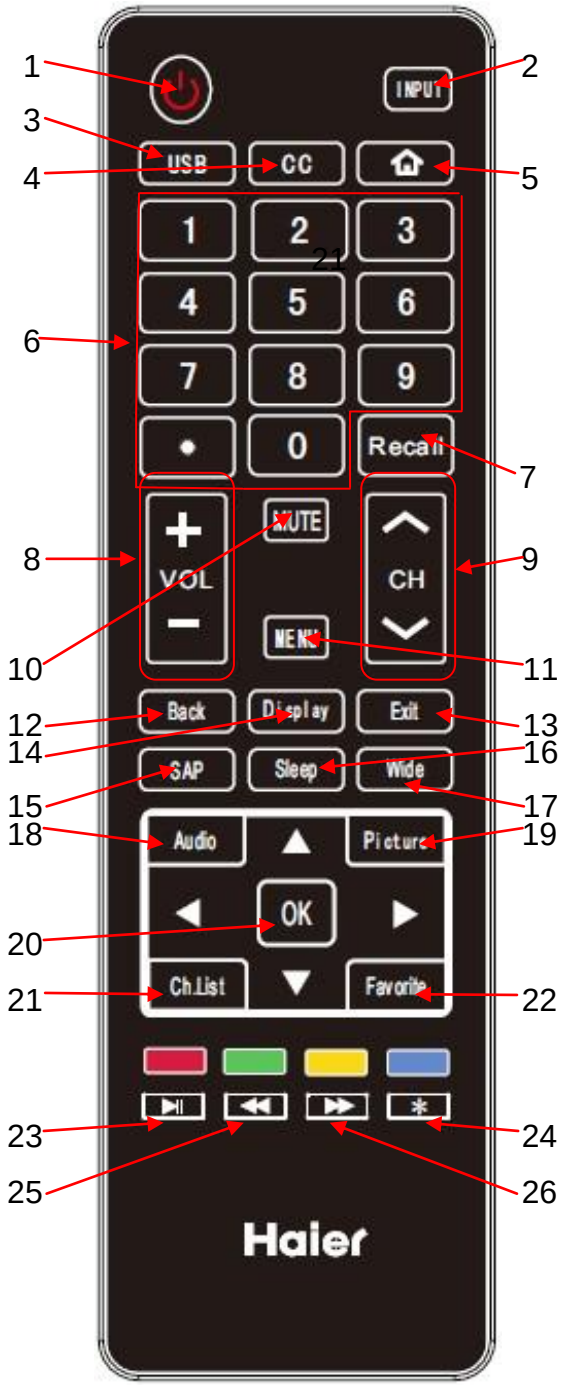

1	POWER.
2	INPUT.
3	USB Shortcut button.
4	CC.
5	HOME;
6	Program Number Channel selection.
7	RECALL button.
8	VOL+/VOL-: Volume selection.
9	CH∧/CH∨: Channel selection.
10	Mute.
11	Menu button.
12	Back button.
13	Exit button.
14	DISPLAY button.
15	SAP button.
16	Sleep button.
17	Wide button.
18	Audio button.
19	Picture Mode.
20	OK button.
21	Channel List.
22	Favorite program.
23	Play / Pause button (only for USB).
24	EPG button.
25	Fast Reverse (only for USB).
26	Fast Forward (only for USB).

Chapter 7. Electrical Parts

7-1. Circuit Diagram

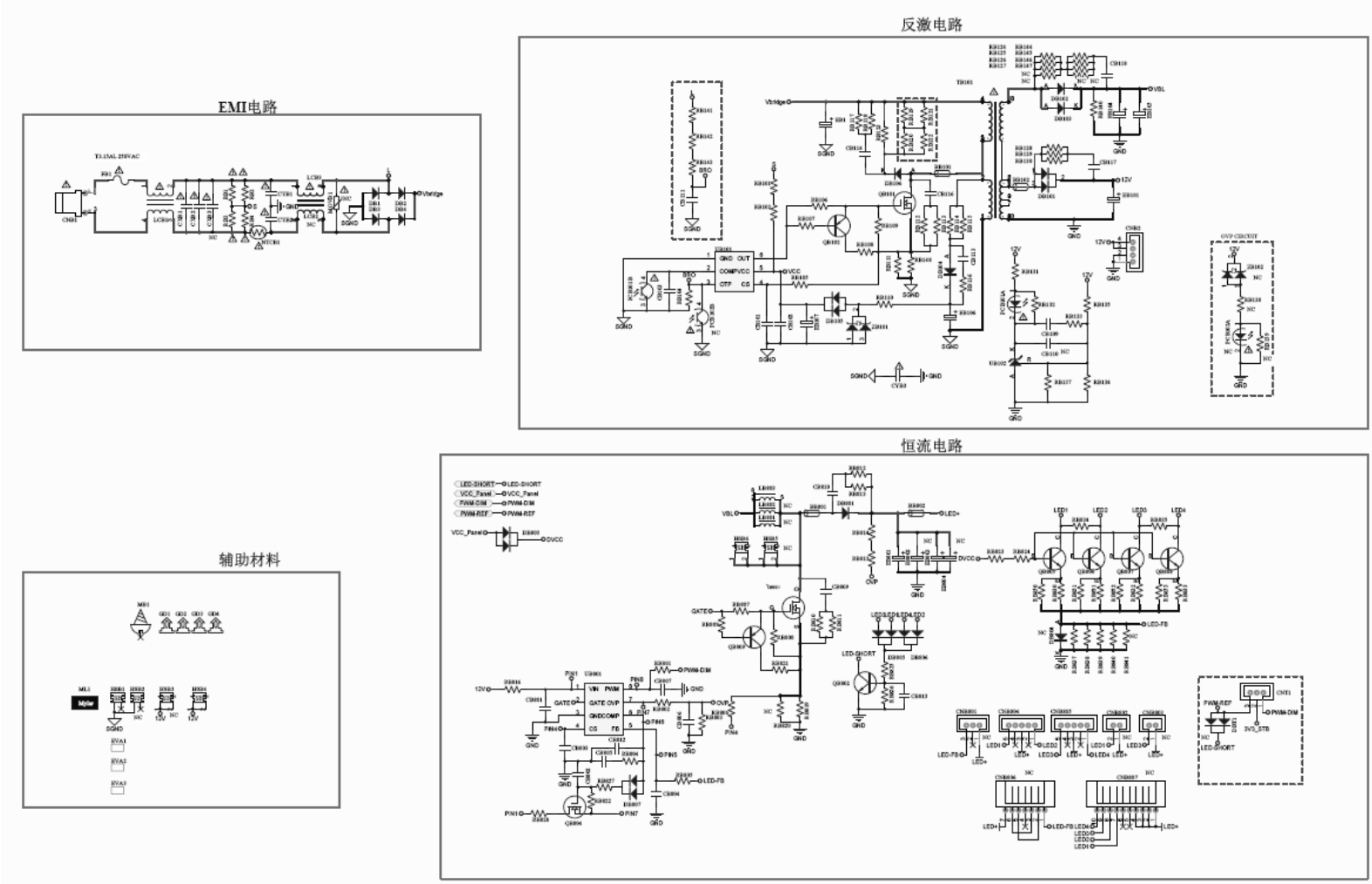

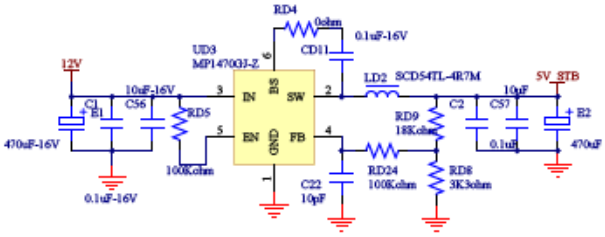
RD4
0ohm
CD11
0.1uF-16V
UD3
MP1470GJ-Z
12V
CL
E1
470uF-16V
10uF-16V
CS6
RD5
100Kohm
0.1uF-16V
IN
BS
SW
EN
FB
GND
LD2
SCD54TL-4R7M
RD9
18Kohm
RD24
100Kohm
C22
10pF
C2
CS7
10uF
0.1uF
5V_STB
E2
470uF
RD8
3K3ohm

PWM-DIM
TEST
PWM-DIM
PWM/ADJ
RB9
1Kohm
PWM-DIM

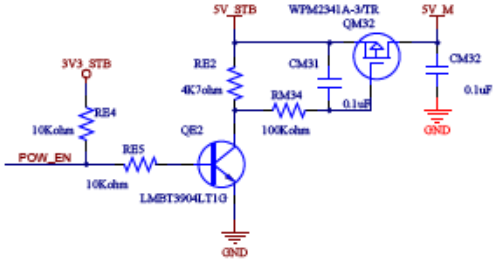
5V_STB
WPM2341A-3/TR
QM32
5V_M
3V3_STB
RE2
4K7ohm
CM31
0.1uF
CM32
0.1uF
GND
RM34
100Kohm
RE4
10Kohm
QE2
POW_EN
RE5
10Kohm
LMBT3904LT1G
GND

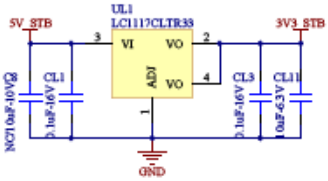
UL1
LC1117CLTR33
5V_STB
3V3_STB
VI
VO
ADJ
VO
NC/10uF-10V
CL1
0.1uF-16V
CL3
0.1uF-16V
CL11
10uF-6.3V
GND

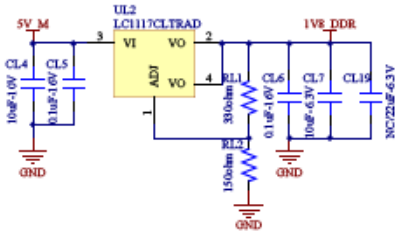
UL2
LC1117CLTRAD
5V_M
1VR_DDR
VI
VO
ADJ
VO
CL4
10uF-10V
CL5
0.1uF-16V
RL1
330ohm
CL6
0.1uF-16V
CL7
10uF-6.3V
CL19
NC/22uF-6.3V
RL2
150ohm
GND

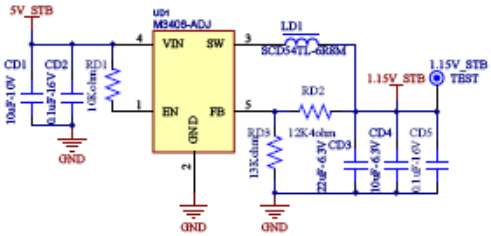
5V_STB
UD1
M3408-ADJ
VIN
SW
EN
FB
GND
LD1
SCD54TL-6R8M
CD1
10uF-10V
CD2
0.1uF-16V
RD1
10Kohm
RD2
1.15V_STB
1.15V_STB
TEST
RD3
13Kohm
12K4ohm
CD3
22uF-6.3V
CD4
10uF-6.3V
CD5
0.1uF-16V
GND

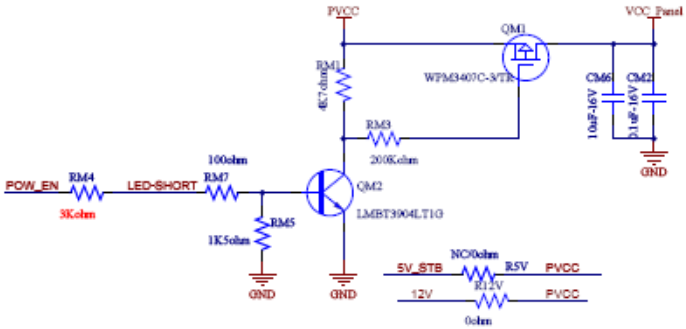
PVCC
QM1
VCC_Panel
RM1
4K7ohm
WPM3407C-3/TR
CM66
10uF-16V
CM2
0.1uF-16V
RM3
200Kohm
GND
100ohm
POW_EN
RM4
3Kohm
LED-SHORT
RM7
QM2
LMBT3904LT1G
RM5
1K5ohm
GND
GND
5V_STB
NC/0ohm
R5V
PVCC
12V
R12V
PVCC
0ohm

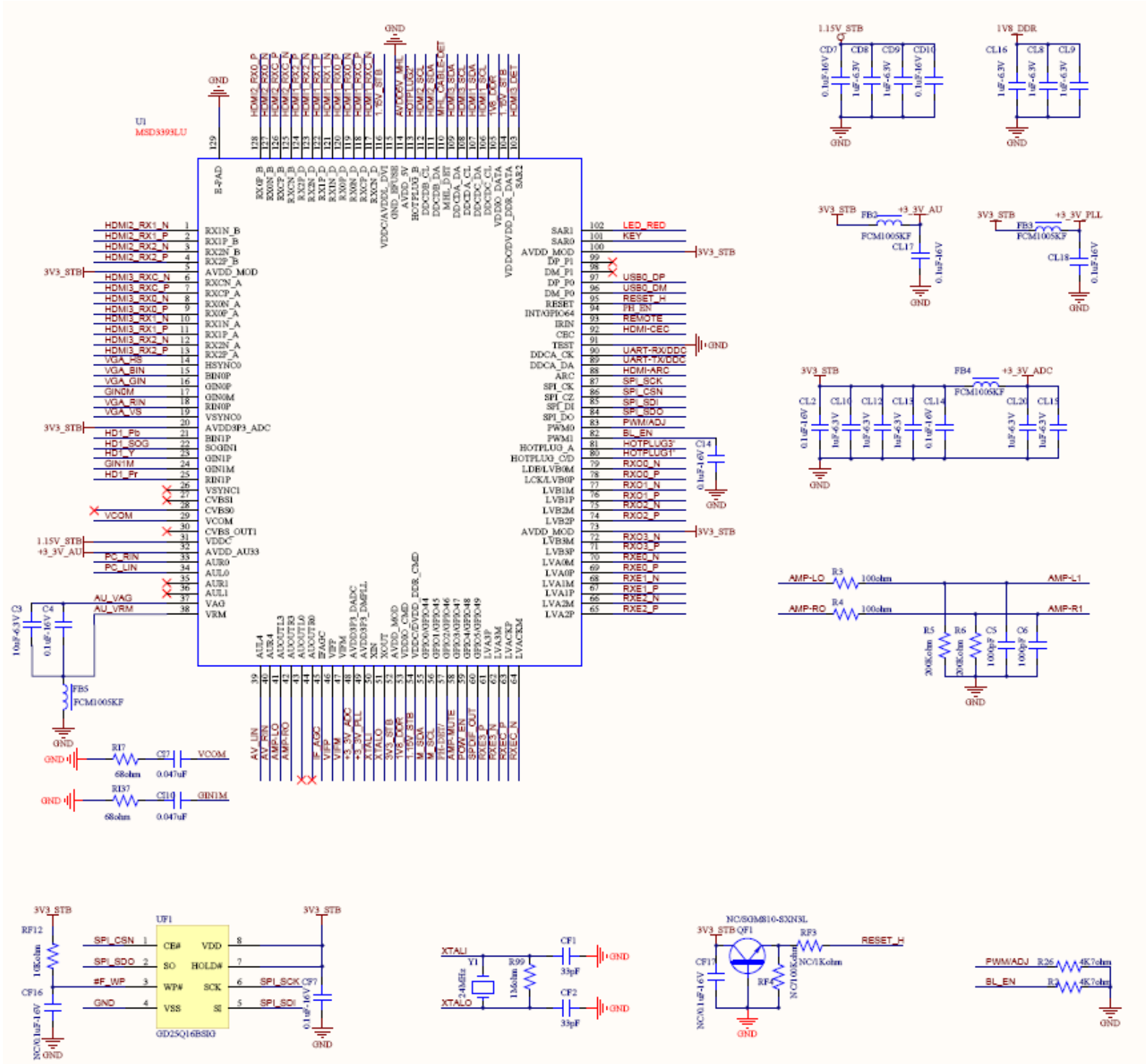
U1
MSD3393LU
GND
3V3_STB
1.15V_STB
+3_3V_AU
+3_3V_ADC
+3_3V_PLL
1V8_DDR
FB3
FB4
FCM1005KF
CL17
CL18
CL2
CL10
CL12
CL13
CL14
CL20
CL15
CD7
CD8
CD9
CD10
CL16
CL8
CL9
HDMI2_RX1_N
HDMI2_RX1_P
HDMI2_RX2_N
HDMI2_RX2_P
HDMI3_RXC_N
HDMI3_RXC_P
HDMI3_RX0_N
HDMI3_RX0_P
HDMI3_RX1_N
HDMI3_RX1_P
HDMI3_RX2_N
HDMI3_RX2_P
VGA_HS
VGA_BIN
VGA_GIN
GINOM
VGA_RIN
VGA_VS
HD1_Pb
HD1_SOG
HD1_Y
GIN1M
HD1_Pr
VCOM
PC_RIN
PC_LIN
AU_VAG
AU_VRM
C3
C4
FB5
RI7
C37
RI37
C10
68ohm
0.047uF
GIN1M
LED_RED
KEY
USB0_DP
USB0_DM
RESET_H
PH_EN
REMOTE
HDMI-CEC
UART-RX/DDC
UART-TX/DDC
HDMI-ARC
SPI_SCK
SPI_CSN
SPI_SDI
SPI_SDO
PWM/ADJ
BL_EN
HOTPLUG3'
HOTPLUG1'
RXO0_N
RXO0_P
RXO1_N
RXO1_P
RXO2_N
RXO2_P
RXO3_N
RXO3_P
RXE0_N
RXE0_P
RXE1_N
RXE1_P
RXE2_N
RXE2_P
C14
AMP-LO
AMP-RO
R3
R4
100ohm
AMP-L1
AMP-R1
R5
R6
C5
C6
200Kohm
1000pF
UF1
GD25Q16BSIG
RF12
CF16
SPI_CSN
SPI_SDO
#F_WP
SPI_SCK
SPI_SDI
CF7
XTALI
XTALO
Y1
24MHz
R99
136ohm
CF1
CF2
33pF
NC/SGM810-SXN3L
QF1
RF3
RESET_H
NC/1Kohm
CF17
RF4
NC/100Kohm
PWM/ADJ
BL_EN
R26
R3
4K7ohm

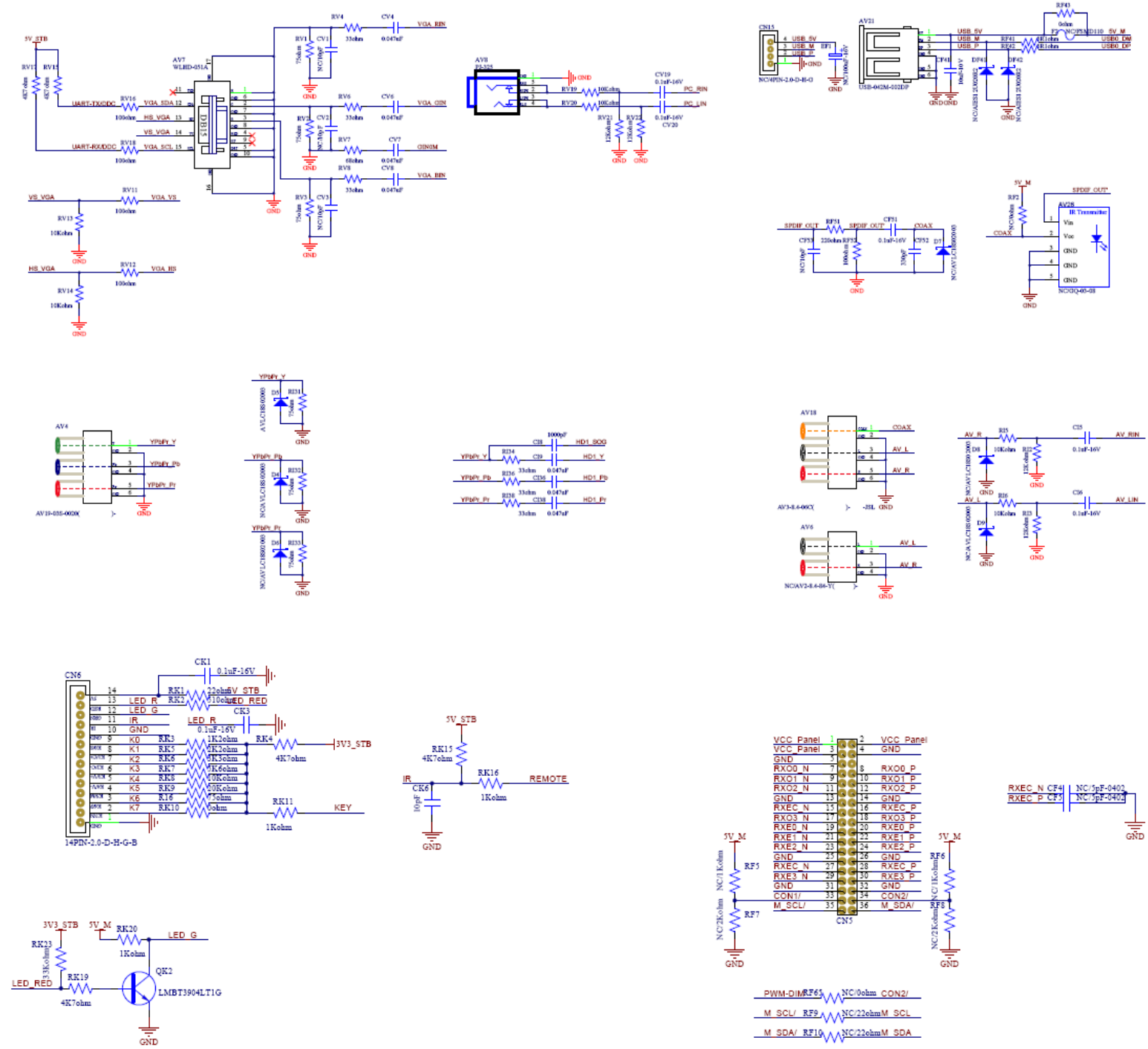
5V_STB
AV7
WLHD-051A
DB15
UART-TX/DDC
UART-RX/DDC
VGA_SDA 12
HS_VGA 13
VS_VGA 14
VGA_SCL 15
VGA_RIN
VGA_GIN
GIN0M
VGA_BIN
VGA_VS
VGA_HS
AV8
PA325
PC_RIN
PC_LIN
CN15
NC/4PIN-2.0-D-H-O
USB_5V
USB_M
USB_P
AV21
USB-042M-002DP
USB0_DM
USB0_DP
5V_M
SPDIF_OUT
COAX
AV28
IR Transmitter
Vin
Vcc
GND
NC/OQ-03-08
AV4
YPbPr_Y
YPbPr_Pb
YPbPr_Pr
AV10-035-0020(
HD1_SOG
HD1_Y
HD1_Pb
HD1_Pr
AV18
AV3-8.6-06C(
AV_L
AV_R
AV_RIN
AV_LIN
AV6
NC/AV2-8.6-06-T(
CN6
14PIN-2.0-D-H-G-B
LED_R
LED_G
IR
GND
LED_RED
3V3_STB
KEY
REMOTE
CN5
VCC_Panel
RXO0_N
RXO1_N
RXO2_N
RXEC_N
RXO3_N
RXE0_N
RXE1_N
RXE2_N
RXE3_N
CON1/
M_SCL/
RXO0_P
RXO1_P
RXO2_P
RXEC_P
RXO3_P
RXE0_P
RXE1_P
RXE2_P
RXE3_P
CON2/
M_SDA/
RXEC_N CF4
RXEC_P CF5
NC/3pF-0402
QK2
LMBT3904LT1G
PWM-DIM RF65 NC/0ohm CON2/
M_SCL/ RF9 NC/22ohm M_SCL
M_SDA/ RF10 NC/22ohm M_SDA

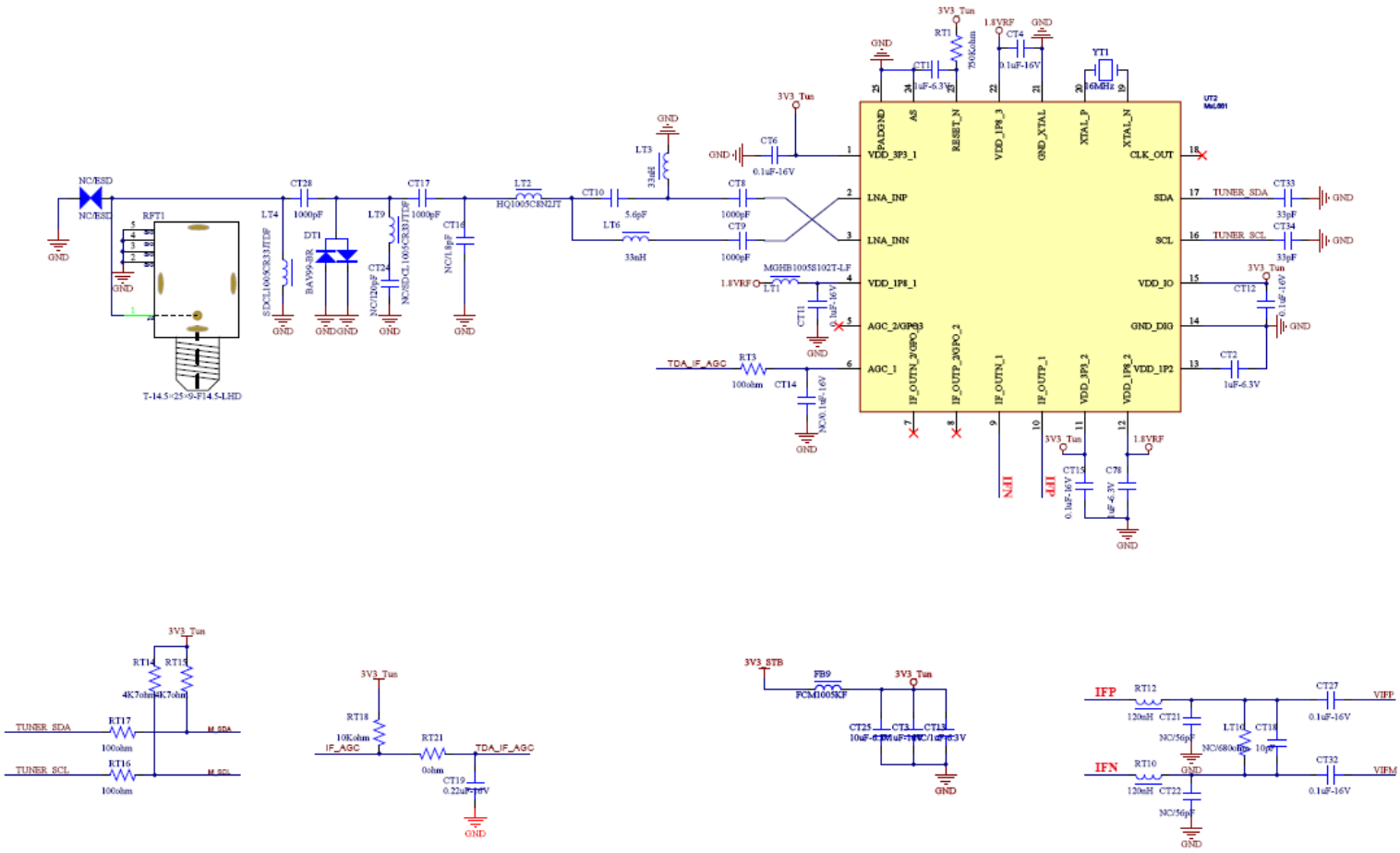
NC/ESD
RFT1
T-14.5×25×9-F14.5-LHD
CT28
1000pF
LT4
DT1
BAV99-BR
LT9
CT24
NC/120pF
CT17
1000pF
CT16
NC/18pF
LT2
HQ1005CR8N2JT
CT10
5.6pF
LT6
33nH
LT3
33nH
CT8
1000pF
CT9
1000pF
CT6
0.1uF-16V
MGHB1005S102T-LF
LT1
CT11
0.1uF-16V
TDA_IF_AGC
RT3
100ohm
CT14
NC/0.1uF-16V
3V3_Tun
RT1
750Kohm
1.8VRF
CT4
0.1uF-16V
CT1
1uF-6.3V
YT1
16MHz
UT2
PADGND
AS
RESET_N
VDD_1P8_3
GND_XTAL
XTAL_P
XTAL_N
VDD_3P3_1
LNA_INP
LNA_INN
VDD_1P8_1
AGC_2/GPO3
AGC_1
IF_OUTN_2/GPO_1
IF_OUTP_2/GPO_2
IF_OUTN_1
IF_OUTP_1
VDD_3P3_2
VDD_1P8_2
CLK_OUT
SDA
SCL
VDD_IO
GND_DIG
VDD_1P2
TUNER_SDA
TUNER_SCL
CT33
33pF
CT34
33pF
CT12
0.1uF-16V
CT2
1uF-6.3V
IFN
IFP
CT15
0.1uF-16V
C78
1uF-6.3V
RT14
RT15
4K7ohm
TUNER_SDA
RT17
100ohm
M_SDA
TUNER_SCL
RT16
100ohm
M_SCL
RT18
10Kohm
IF_AGC
RT21
0ohm
TDA_IF_AGC
CT19
0.22uF-16V
3V3_STB
FB9
FCM1005KF
CT25
CT3
CT13
IFP
RT12
120nH
CT21
NC/56pF
LT10
NC/680nH
CT18
10pF
CT27
0.1uF-16V
VIFP
IFN
RT10
120nH
CT22
NC/56pF
CT32
0.1uF-16V
VIFM
GND

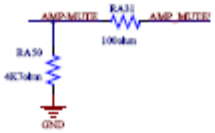
AMP-MUTE
RA31
100ohm
AMP_MUTE
RA59
4K7ohm
GND

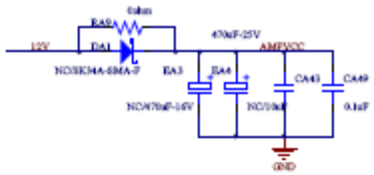
12V
DA1
NC/SK34A-SMA-F
RA3
RA4
470uF-25V
AMPVCC
CA43
CA49
0.1uF
GND

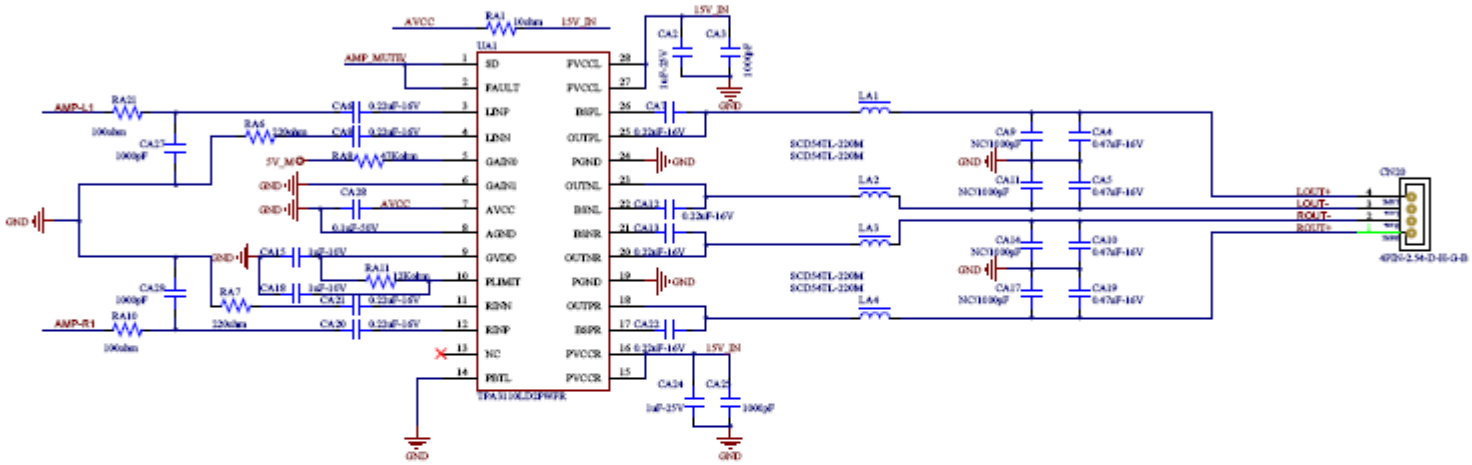
AVCC
RA1
10ohm
15V_IN
UA1
AMP_MUTE
AMP-L1
RA21
100ohm
CA27
1000pF
RA6
120ohm
5V_M
RA8A
47Kohm
CA28
AVCC
0.1uF-16V
GND
CA15
1uF-16V
RA11
11Kohm
CA19
CA21
0.22uF-16V
CA20
RA7
120ohm
CA26
1000pF
AMP-R1
RA10
100ohm
TPA3116D2DPWPR
SD
FAULT
LINP
LINN
GAIN0
GAIN1
AVCC
AGND
GVDD
PLIMIT
RINN
RINP
NC
PBTL
PVCCL
PVCCL
BSPL
OUTPL
PGND
OUTNL
BSNL
BSNR
OUTNR
PGND
OUTPR
BSPR
PVCCR
PVCCR
CA2
CA3
1uF-25V
1000pF
CA7
0.22uF-16V
CA13
0.22uF-16V
CA23
0.22uF-16V
CA24
CA25
LA1
LA2
LA3
LA4
SCD54TL-220M
CA8
NC/100pF
CA4
0.47uF-16V
CA11
CA5
CA14
CA10
CA17
CA19
CN20
LOUT+
LOUT-
ROUT-
ROUT+
4P20-2.54-D-H-G-B

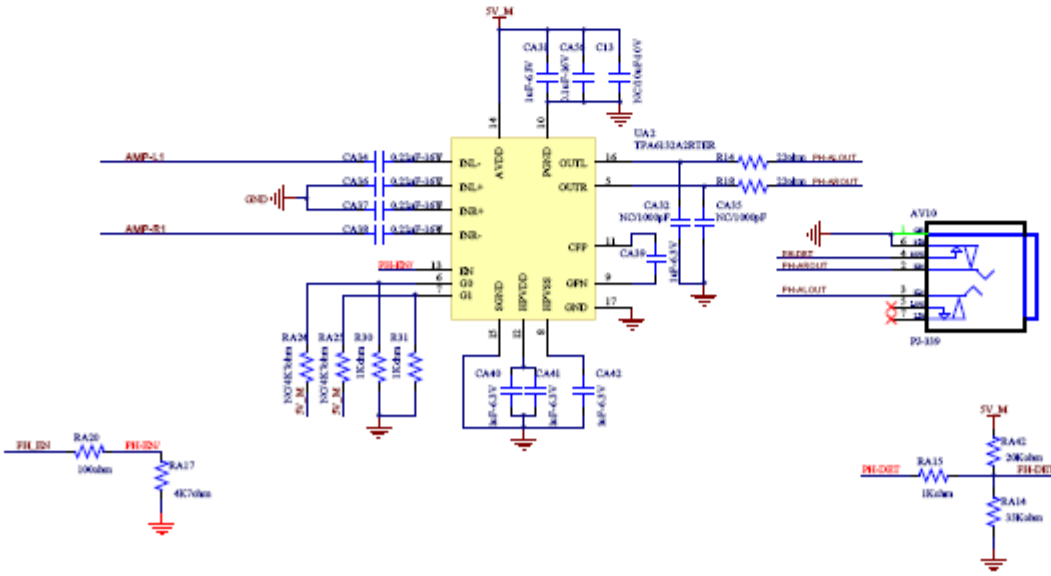
5V_M
CA31
CA36
C13
UA3
TPA6133A2RTER
AMP-L1
AMP-R1
CA34
CA35
CA37
CA38
INL-
INL+
INR+
INR-
AVDD
PGND
OUTL
OUTR
CFF
GFN
GND
IN
G0
G1
SGND
HPVDD
HPVSS
R14
R18
CA32
NC/1000pF
CA33
NC/1000pF
CA39
AV19
PJ-319
RA26
RA25
R30
R31
CA40
CA41
CA42
FH_IN
RA20
100ohm
RA17
4K7ohm
PH-DET
RA15
1Kohm
RA42
20Kohm
RA14
33Kohm

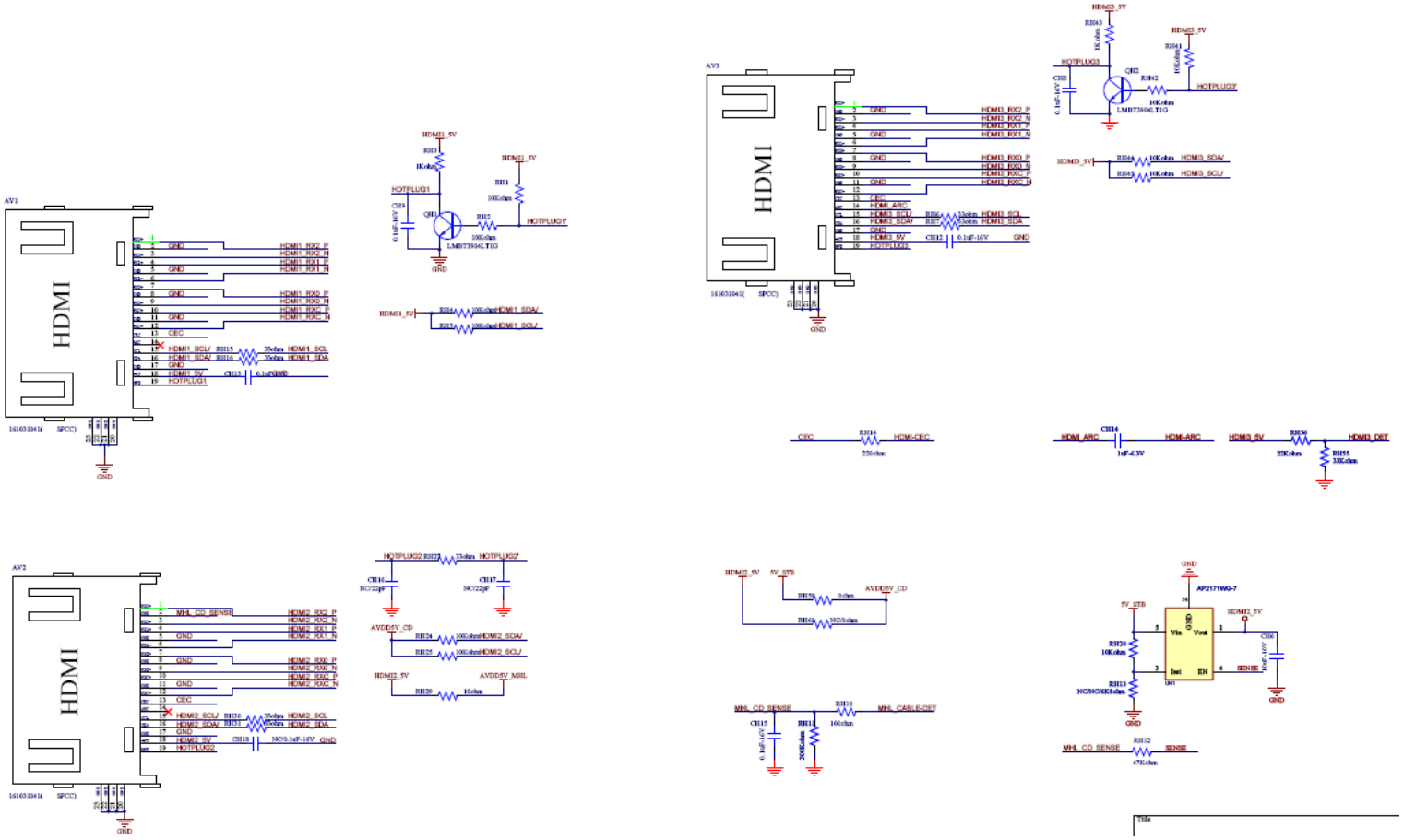
AV1
HDMI
AV2
HDMI
AV3
HDMI
HDMI1_5V
HDMI2_5V
HDMI3_5V
HOTPLUG1
HOTPLUG2
HOTPLUG3
HDMI1_RX2_P
HDMI1_RX2_N
HDMI1_RX1_P
HDMI1_RX1_N
HDMI1_RX0_P
HDMI1_RX0_N
HDMI1_RXC_P
HDMI1_RXC_N
HDMI1_SCL
HDMI1_SDA
HDMI2_RX2_P
HDMI2_RX2_N
HDMI2_RX1_P
HDMI2_RX1_N
HDMI2_RX0_P
HDMI2_RX0_N
HDMI2_RXC_P
HDMI2_RXC_N
HDMI2_SCL
HDMI2_SDA
HDMI3_RX2_P
HDMI3_RX2_N
HDMI3_RX1_P
HDMI3_RX1_N
HDMI3_RX0_P
HDMI3_RX0_N
HDMI3_RXC_P
HDMI3_RXC_N
HDMI3_SCL
HDMI3_SDA
HDMI_ARC
CEC
MHL_CD_SENSE
MHL_CABLE-DET
AVDD5V_CD
AVDD5V_MBL
5V_STB
AP2171WG-7
GND

7-2 . Wiring Connection Diagram

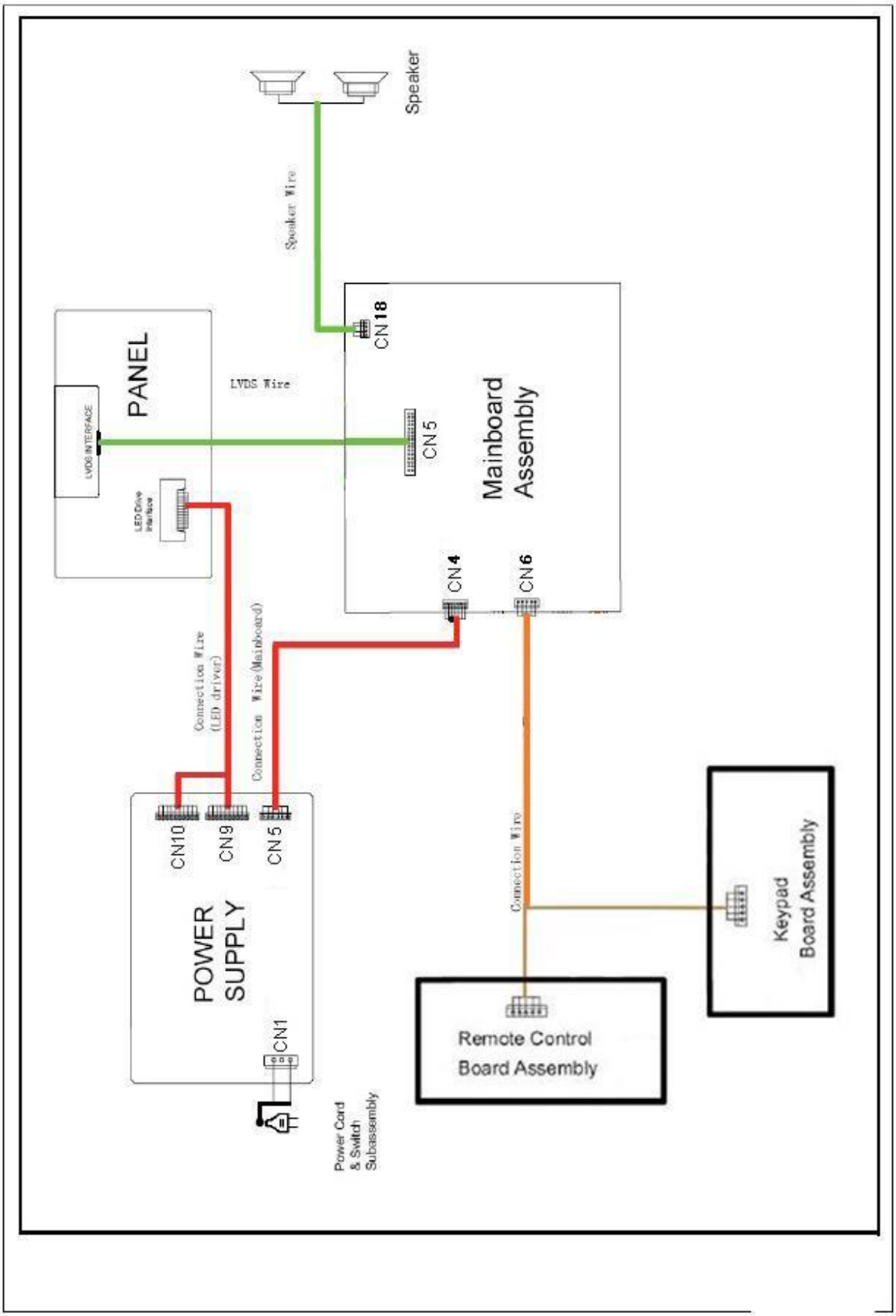

Chapter 8. Measurements and Adjustments

8-1. Service Mode

8-1-1.How to enter into Service Mode

The way to the factory mode menu:
Step 1: Press Menu,
Step 2: Press “8893”,
System will be into the factory mode menu when 2 steps above are done.
At the end of the main factory menu, you can see the edition of the software,
like this" BUILD TIME 2014-01-21 23:17:21
VERSION v1.0 ”.

8-1-2.How to exit

If you want to exit this factory menu, please press the button ”Exit” on the remote.
system will be out the factory mode menu.

8-2. Measurements and Adjustments

8-2-1. The Main Menu

In factory mode menu,press up/down button to choose the up/down item,press right or OK button to the submenu.press MENU button to go back.

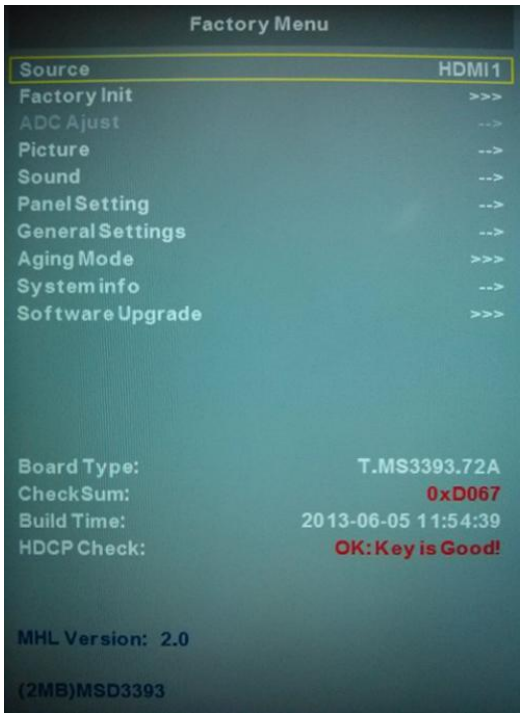

8-2-2. GENERAL SETTING

1)Init Flash;
2)Uart Enable:Choose on or off in Uart Enable;
3)Dbg Message Enable: Choose on or off in Dbg Message Enable;
4)Test Pattern: Choose the Pattern picture;
5)Dynamic Contrast: Choose on or off in Dynamic Contrast;
6)Power On Mode:Choose on or off in Power On Mode;
7)Mirror Control: Choose on or off in Mirror Control;
8)Front End Status
9)Timer Test
10)SSC
11)Erase Flash
12)PQ Advance Debug: Choose on or off in PQ Advance Debug;
13)Factory remote:Open or close the Factory remote;
14)Factory CH Export.

8-2-3. PICTURE

Adjust the Picture Mode,Picture Curve, White Balance and OverScan in different source.

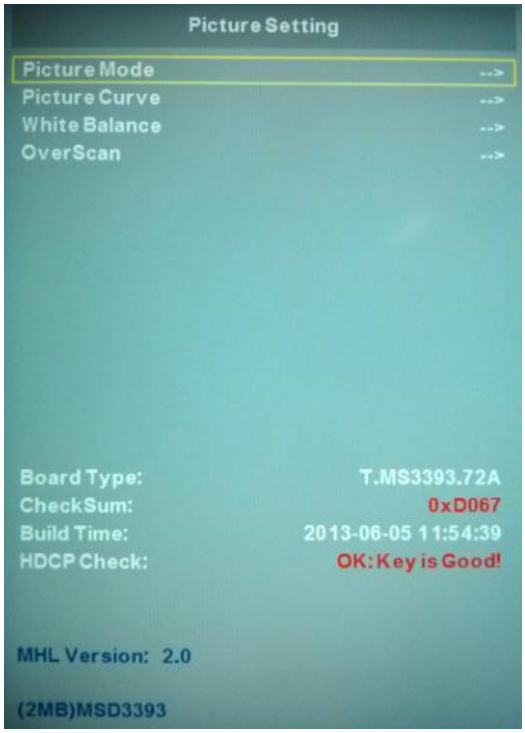

8-2-4. SOUND

Adjust the values of Sound Mode, Volume Curve,Audio Output and True Volume in different source.

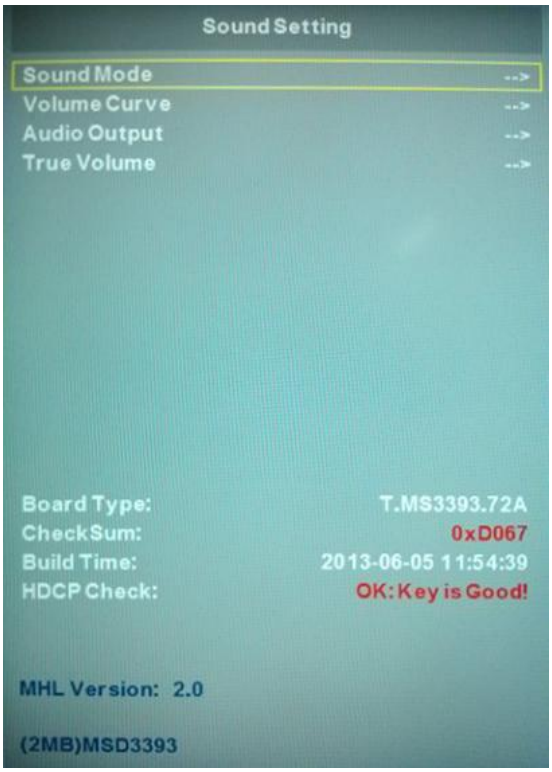

8-2-5. Panel Setting

1)LVDS Bit Mode: choose the Bit;
2)LVDS MAP: choose the MAP;
3)LVDS ODD/Even: choose ODD or Even;
4)Bcaklight:Adiust the value of backlight;
5)Reset Panel Setting Date
6)6MX0 LVDS Map: choose the 6MX0 LVDS MAP;
7) 6MX0 Channel: choose the 6MX0 Channel;
8)6MX0 Mirror: choose the 6MX0 Mirror;
9)6MX0 Demo: choose the 6MX0 Demo;
10)6MX0 Update.

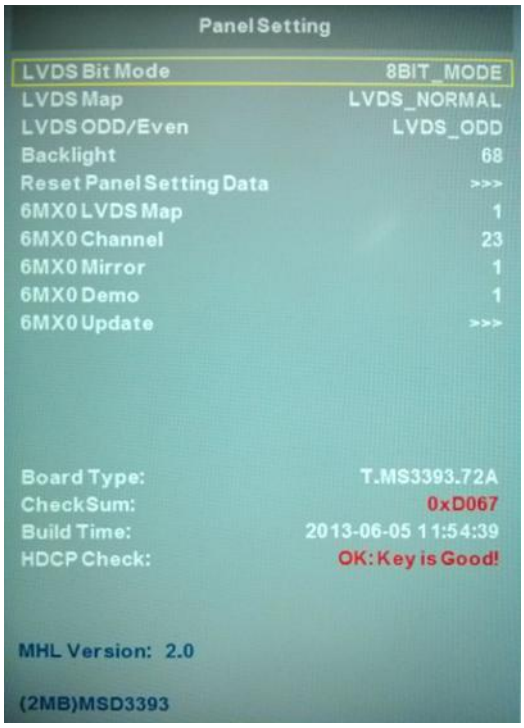

8-3. Software Update

8-3-1. MSD3393LU software update

1. Copy the software files to a USB disk on the root directory;

2. Insert the USB disk when the AC power is off;
3. Turn on the AC power in turn to begin;
4. Turn off the AC power until the indicator light fast twinkling;
5. Pull out the USB disk and power on the television.

Note:

Do not turn off the TV while it is updating.

Chapter 9. Trouble shooting

9-1. Simple check

No picture/ No sound	Verify if the television is properly plugged Verify if the television is properly supplied power Verify if electricity is available.
Blank screen	Verify if correct signals are input Press SOURCE button to change signal input to TV input Restart the television of power supply is interrupted
No sound	Press the MUTE button and verify that Mute mode is active. Switch to another channel to check whether the same problem occurs. Press the VOL+ button to see if the problem can be solved.
Poor sound	Verify that the sound system is correct. Refer to the user manual for instructions on how to adjust it.
No picture on some channel	Verify if correct channel is selected. Adjust the antenna. Make adjustments by Fine Tune and MANUAL Scan.
No color for some channel program (black and white)	Verify that the same problem exists on other channels. Check the picture and sound systems. Refer to the relevant instructions in the manual to adjust the colour.
Spots with some or all pictures	Verify if the antennal is correctly connected. Verify if the antennal is in good condition. Make fine adjustment of channel.
Television is not working	Disconnect the television from the power supply for 10 seconds, then reconnect the television. If the problem persists, contact an authorised after-sales service provider for technical assistance.
Television out of control	Disconnect the television from power supply and 10 seconds later, connect the television to the power supply. If the problem still exists, contact authorized after-sales service for technical assistance.

9-2. Mainboard IC Introduction

Top view

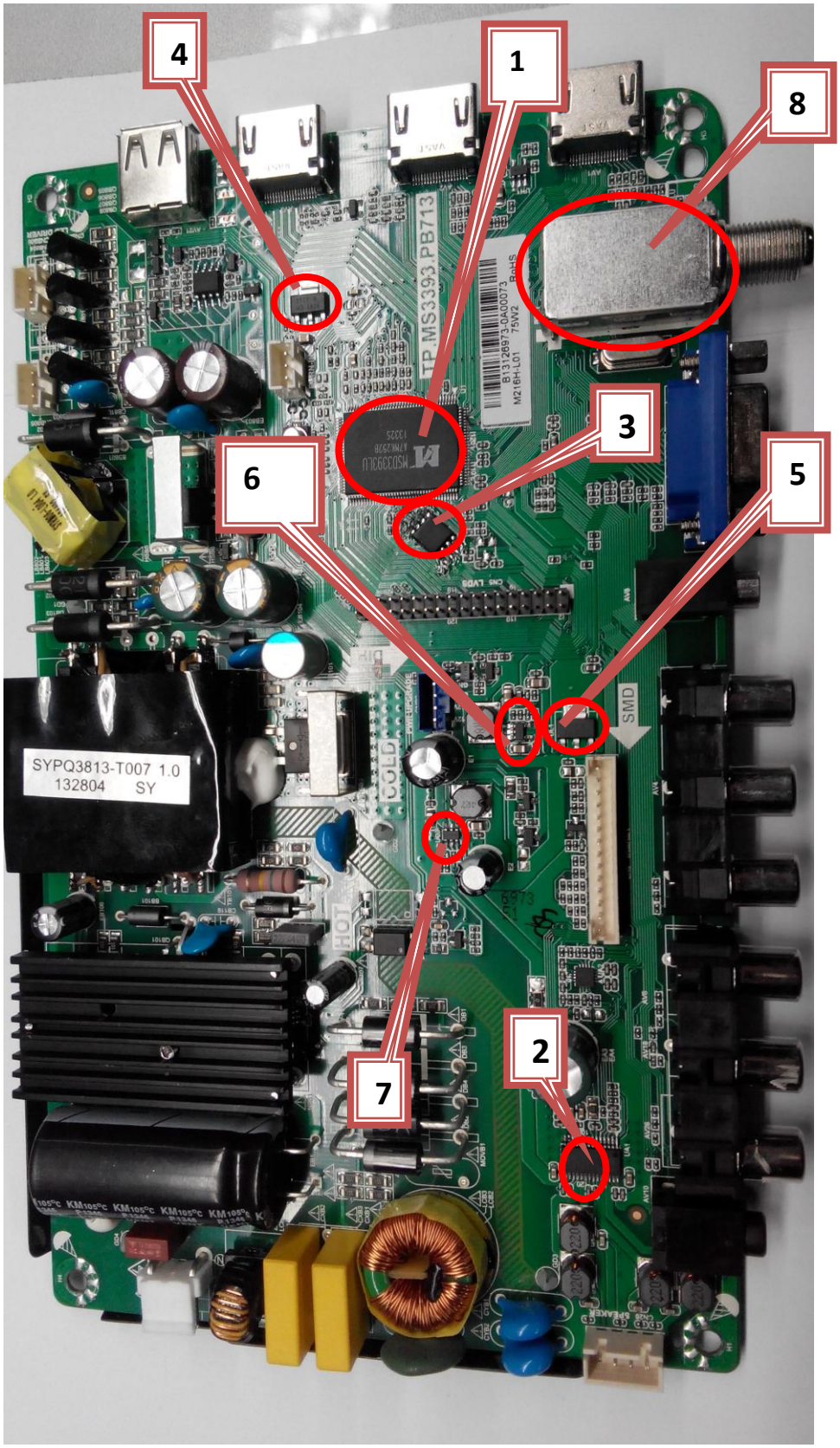

Bottom view

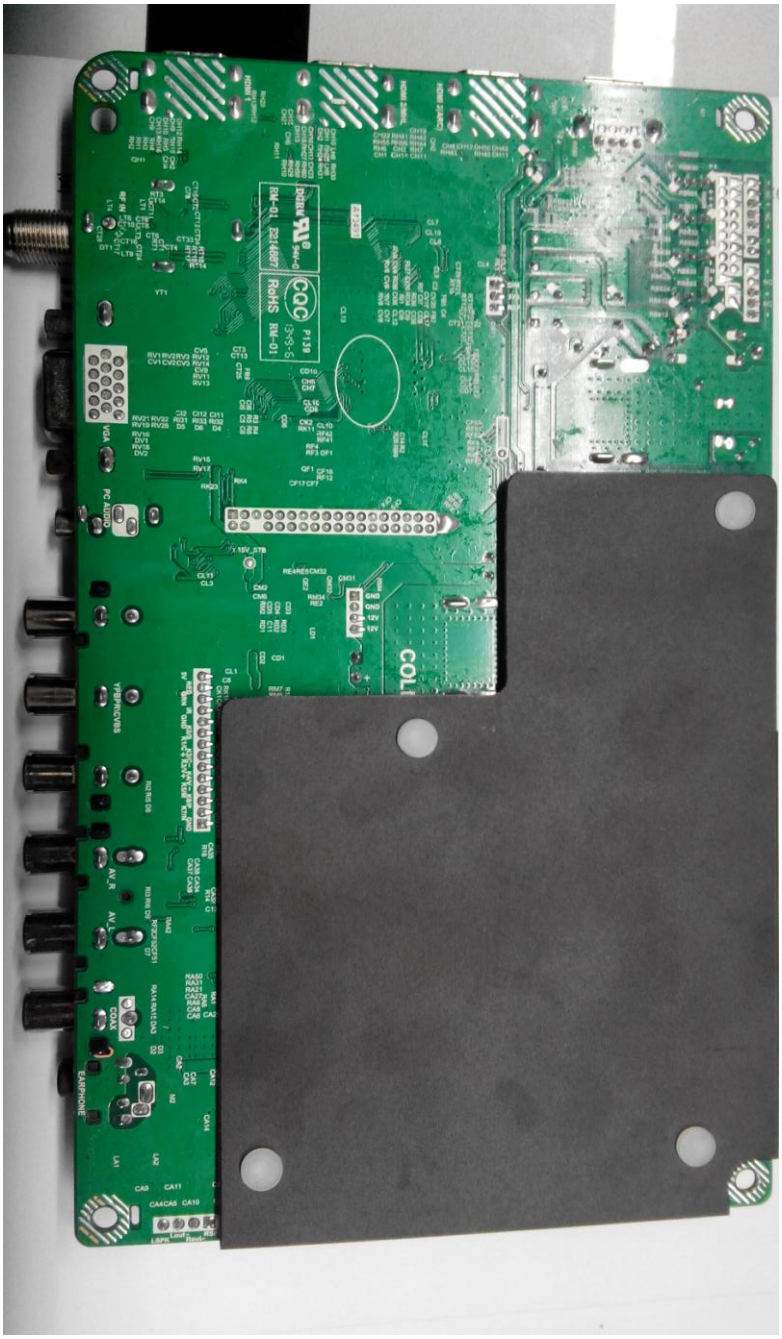

1.Mainchip—MSD3393LU(U1)
2. Audio Amplifier—TPA3110D2PWPR (UA1)
3.Main Flash Memory—GD25Q32BSIG (UF1)
4.DC/DC convertor 5V-1.8V for MSD3393LU (U1)—LC1117CLTRAD (UL2)
5.voltage convertor 5V to 3.3V_STB —LC1117CLTR33 (UL1)
6.voltage convertor 5V to 1.15V_STB —LC3406CB5TR (UD1)
7.voltage convertor 5V to 3V for tuner—LC1117CLTR33 (UT1)
8.Tuner —SDCL1005CR33JTDF (RFT1)

Please check the Schematic Diagram for the particular support

9-3. Mainboard Failure Check

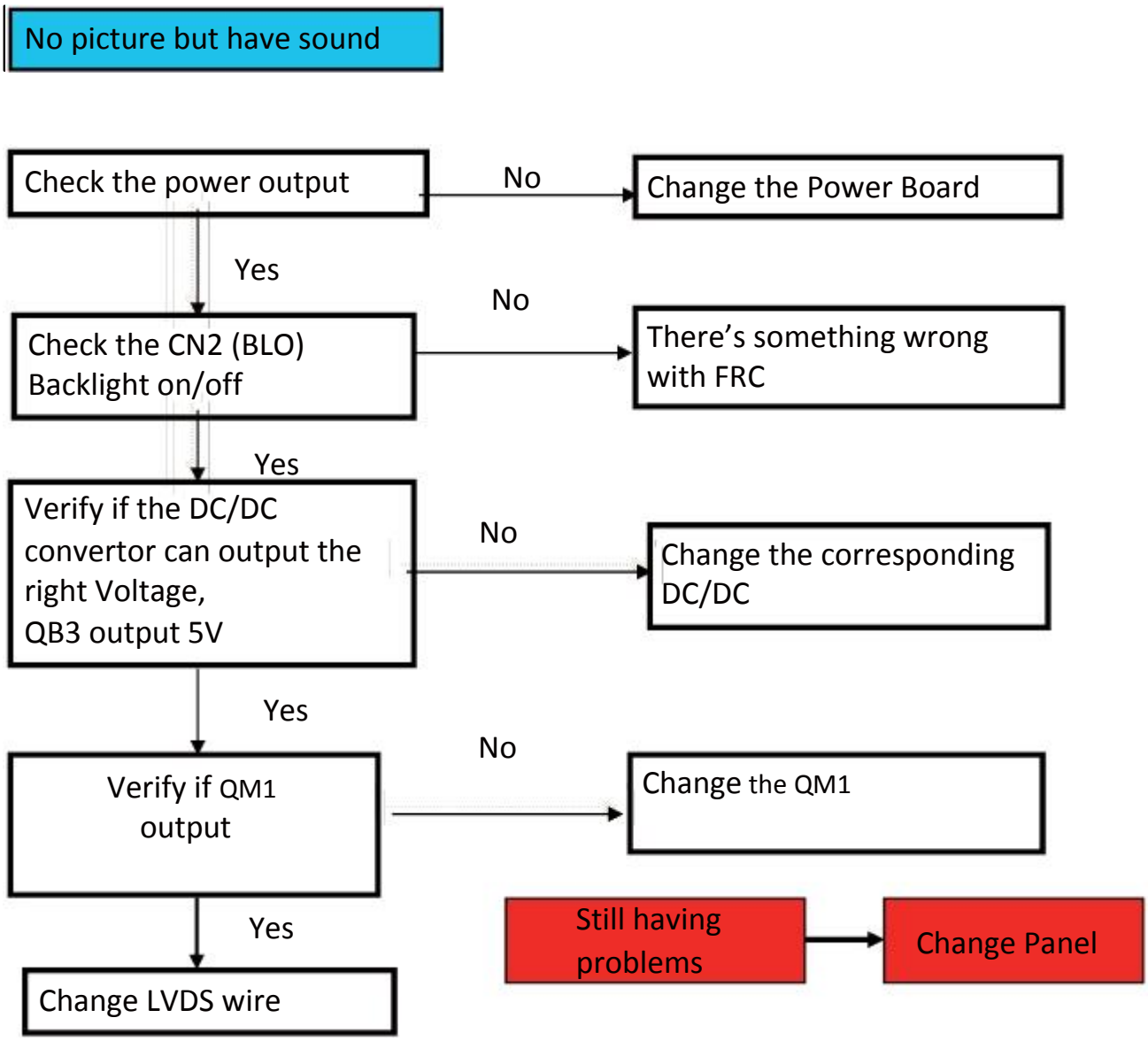

No sound but have picture

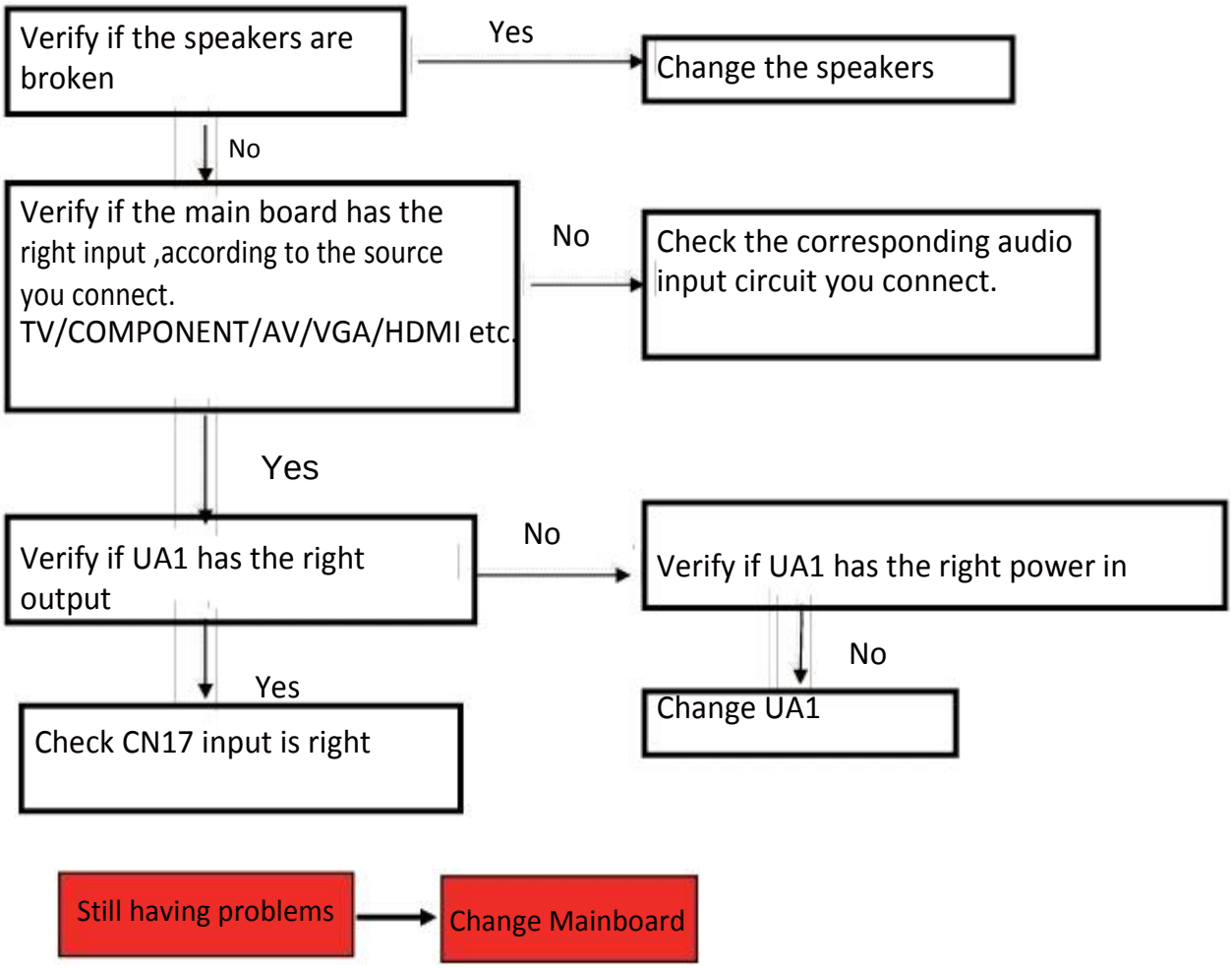

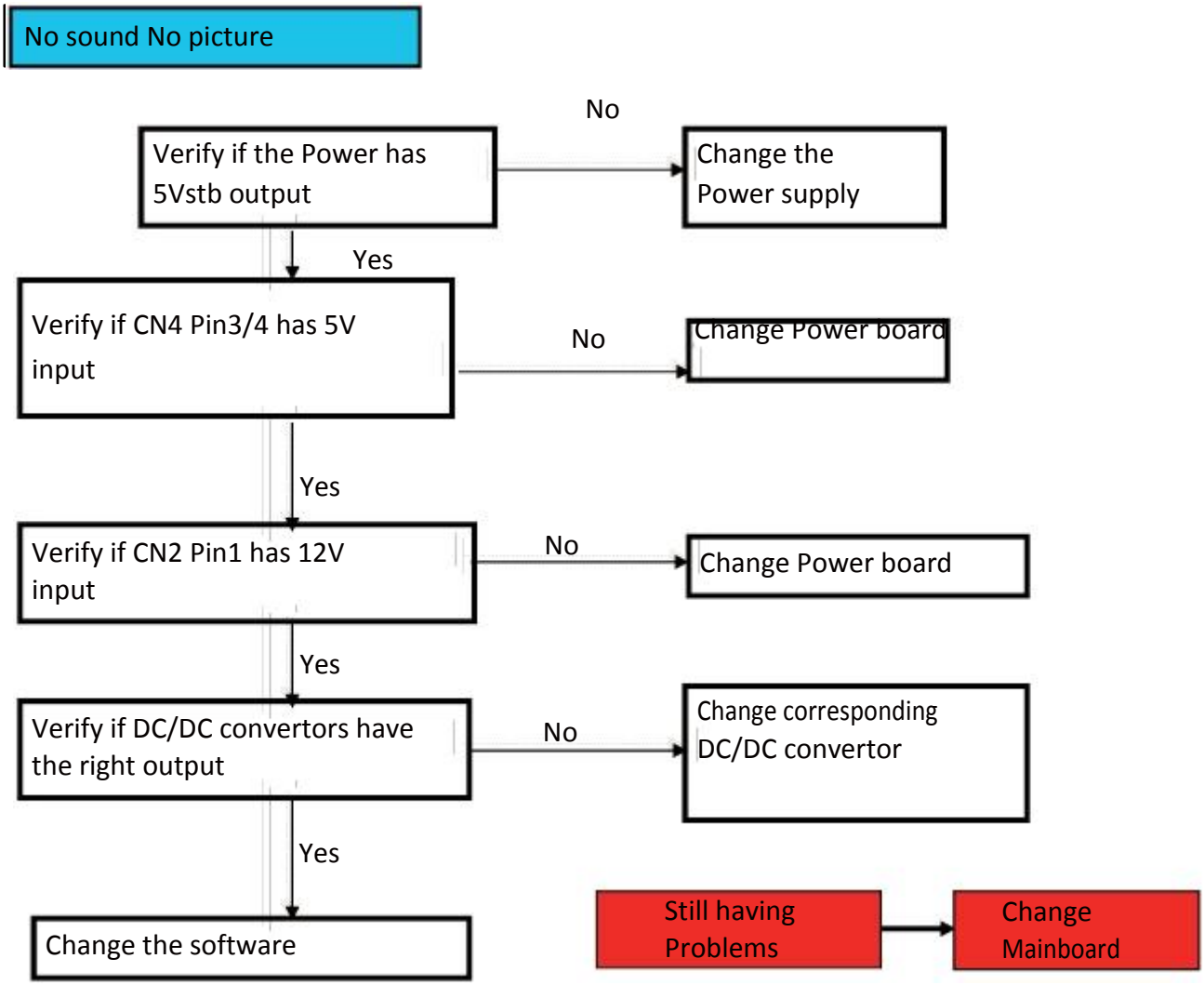
No sound No picture
Verify if the Power has 5Vstb output
No
Change the Power supply
Yes
Verify if CN4 Pin3/4 has 5V input
No
Change Power board
Yes
Verify if CN2 Pin1 has 12V input
No
Change Power board
Yes
Verify if DC/DC convertors have the right output
No
Change corresponding DC/DC convertor
Yes
Change the software
Still having Problems
Change Mainboard

Poor sound

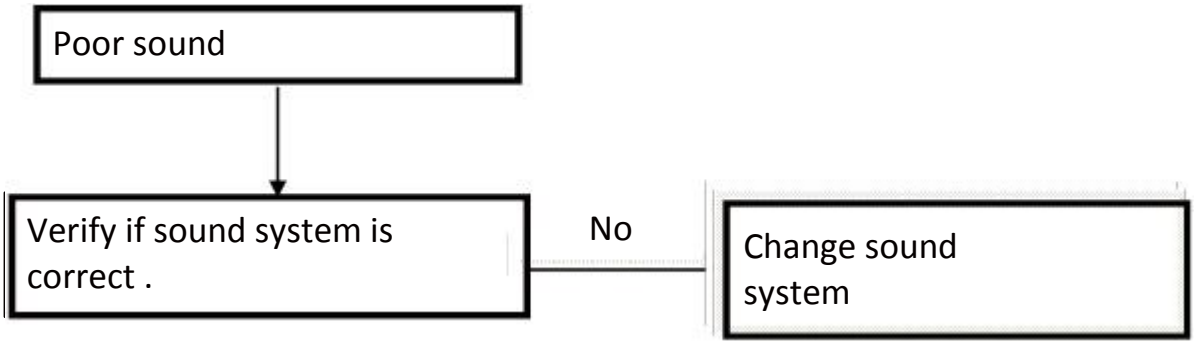

For ease of use, recommend that customer format the picture and sound settings in the automatic option.

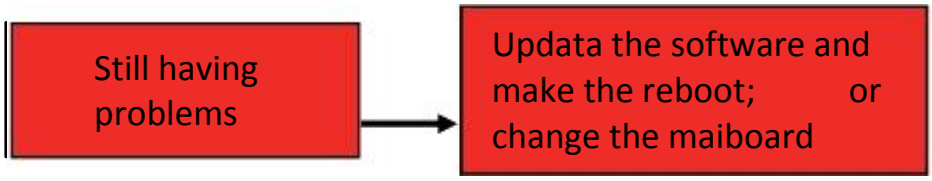

No color for some channel program (black and white)

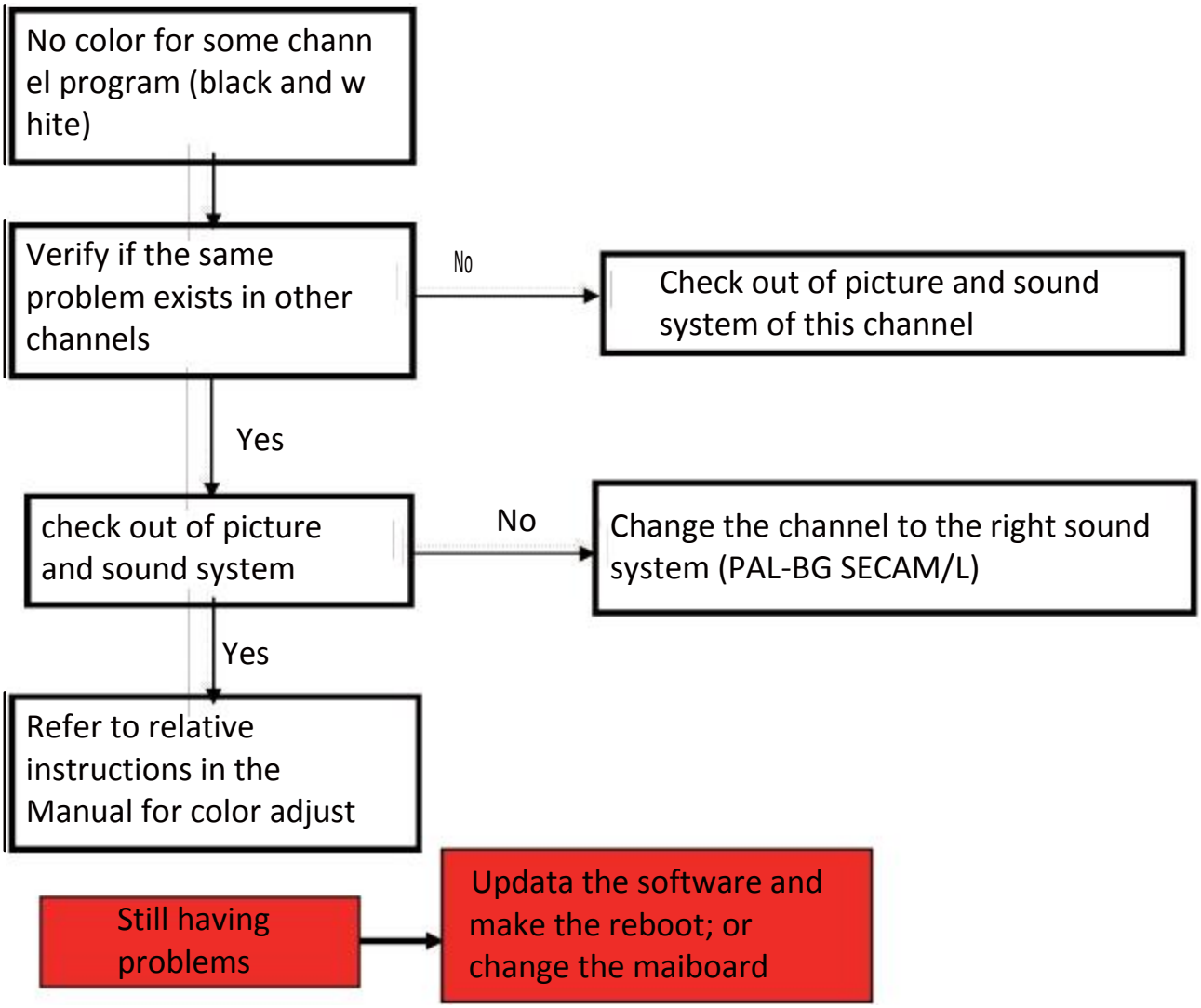

How to know whether the Power board is broken?

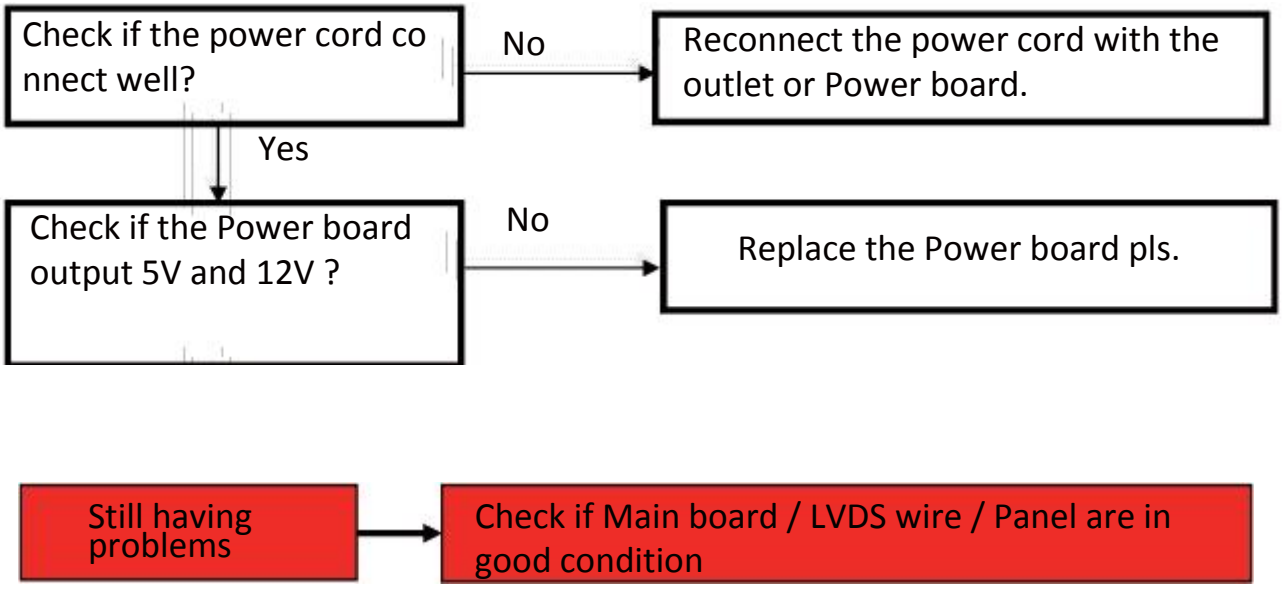

9-4. Pannel Failure

Failure Mode

Part	Name	Description	Phenomena	Failure cause
TCP	V B/D	Vertical bar		Block Defect :TCP cracking or cracking Dim or L/D :TCP Sunken :TCP lead cracking :ACF bonding short :Awful environment and something electric enter into LCD :Mis-align between TCP and Panel :Panel failure :TCP failure
	V Dim	Vertal gray line		
	V L/D	Vertical color line(light or dark forever)	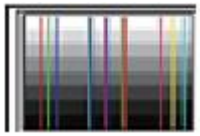	
	H B/D	Horizontal bar	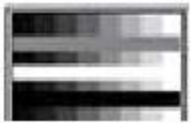	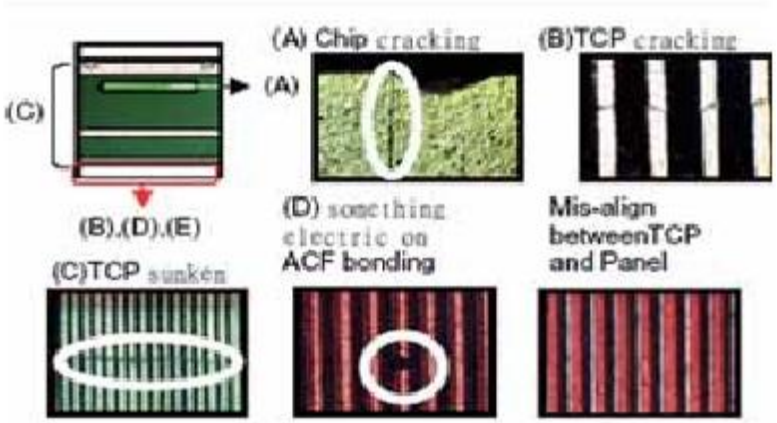
	H Dim	Horizontal gary line	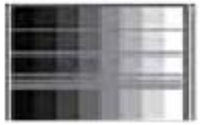	
	H L/D	Horizontal line(light or dark forever)	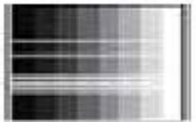	

Part	Name	Description	Phenomena	Failure Cause
Panel or Polarlzer	Dot Defect	Bright dot dark dot in pannel		Incoming Inspection Standard
	Polarizer Bubble	Bladder in Polarizer		Bladder between Polarizer and top glass
	Polarizer Scratch	Polarizer Scratch		Tine or rigidity arose
	F/inside Polarizer	Eyewinker inside Polarizer		Eyewinker inside Polarizer
Circuit	Abnormal Display	Abnormal Display	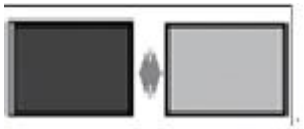	1.Chip lose action 2.IC ahort or jointiog bad 3.Pannel and vsc connect bad
	Flashing	Bright and dark display alternately		

Part	Name	Description	Phenomena	Failure Cause
	White Screen	B/L normal, only white screen display		Maybe caused by surge current and EDS
	Black Screen	B/L normal, only Black screen display		
Circuit	FIIcker	Crosstalk		LCD Vcom imbalance
	Abnormal Color	Only color abormal		Capacitance improper bring crosstalk inside LCD pannel
	Abnormal Color	Only color abnormal		1.Chip lose action 2.IC short or jointion bad 3.Pannel and vsc connect bad

Part	Name	Description	Phenomena	Failure cause
	Mechanlcal Nolse	When turn panel,appear cacophony		Caused by Mechanica noise of backlight unit
	Ripple	Connectric circle		Causeed by between mechanism and pannel
	B/L off	B/L lose action	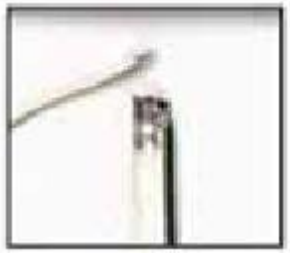	*Connect badness between wire and electrode
	B/L dark	B/L brightness darker than normal		*Connect badnessShort between wire and electrode
	B/L wire damaged	B/L wire damaged		Operation abnormal or systemic noise
	B/L wire open	Without backlight		Operation abnormal or systemic noise
	B/L shut down	B/L shutdown in sometime		Short bitween lamp housing and wire, Because consume power too much
	F/M	F/M inB/L ,white,balck Rotundity or wirelike	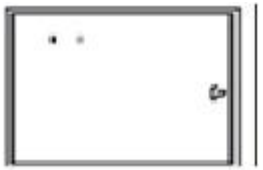	F/M in B/L unit

Part	Name	Description	Phenomena	Failure Cause
Mechanlcal or B/L	Light leakage	Brightness at bottom of LCM brighter than normal		B/L unit badness
	Uniformity	B/L brightness asymmetric		Sheet in B/L unit is uneven
	Mount hole	Lack screw or screw damage		*Lack screw Screw damage

Sincere Forever

Haier Group

Haier Industrial Park, No.1, Haier Road
266101, Qingdao, China
http://www.haier.com

Printed in China